UPS KEOR MOD+

420 - 600 kW Modular UPS (60 kW Power Module)

Installation Manual

Part. LE15890AB-09/26-01 WP

KEOR DK R/T 5-6-10 kVA

EN ENGLISH 3

Table of Contents

1. Safety 5
- 1.1 Important Safety Instructions 5
- 1.2 EMC 5
- 1.3 Installation information 5
- 1.4 Maintenance 6
- 1.5 Recycling the used battery 6
- 1.6 Auto Restart 6

2. Installation 7
- 2.1 Initial Inspection 7
- 2.2 Installation Environment 7
- 2.3 Unpacking 7
- 2.4 Moving the Cabinet 8
- 2.5 Types of UPS Cabinet 9
- 2.6 Exterior 10
- 2.7 Internal Mechanisms 12
- 2.8 Control Panel 14
- 2.9 Introduction of Modules 15
- 2.10 Power Cable 20
- 2.11 Wiring 20
- 2.12 Power Module Installation 22
- 2.13 Back feed Protection 24

3. Operation Mode and UPS Operation 25
- 3.1 Block diagram of UPS 25
- 3.2 Operation Mode 26
- 3.3 UPS Operation 28

4. Control Panel and Display Description 37
- 4.1 Introduction 37
- 4.2 Screen Description 38
- 4.3 Alarm List 58
- 4.4 History Record 61

5. Interface and Communication 62
- 5.1 Dry Contact Port 62
- 5.2 Extra Comm. Slot 64
- 5.3 Local Communication Ports – RS232 & USB 69
- 5.4 SNMP Slot 69
- 5.5 BMS Slot 69

6. Troubleshooting 70

7. Service 72
- 7.1 Replacement Procedures of Power Module 72
- 7.2 Replacement Procedures of STS Module 72
- 7.3 Replacement Procedures of Air Filter 73

Table of Contents

8. Specifications **74**

8.1 Conformity And Standards 74

8.2 Environmental Characteristics 74

8.3 Mechanical Characteristics 74

8.4 Electrical Characteristics (Input Rectifier) 75

8.5 Electrical Characteristics (Intermediate DC Circuit) 76

8.6 Electrical Characteristics (Inverter Output) 76

8.7 Electrical Characteristics (Bypass Mains Input) 77

9. UPS Installation for Parallel Rack System **78**

9.1 Input and Output Wiring 78

9.2 Parallel Board Setting and Power Module 78

9.3 Parallel Function Setting 79

9.4 Parallel Cable Connection 79

9.5 Parallel System Turn On Procedure 80

10. UPS Installation for LBS System **82**

10.1 Input and Output Wiring 82

10.2 LBS Function Setting 83

10.3 LBS Cable Connection

1. Safety

The instructions in this manual are intended for a SKILLED TECHNICIAN (paragraph 2.2.1) to provide information on how to install and maintain the UPS.

You can download the full manual at ups.legrand.com

The purpose of this manual is to provide to the skilled technician:
- instructions to safely install the 420 - 600 kW Modular UPS (60 kW Power Module) also called only "UPS" or "equipment" in the rest of the manual.
- information to carry out ordinary maintenance procedures. Extraordinary maintenance operations are not dealt with because they are the sole preserve of the LEGRAND Technical Support Service.

The manual refers to laws, directives, and standards that the skilled technician is required to be aware of and consult. It does not substitute the skill of technical personnel who must have received adequate preliminary training.
The intended use and configurations envisaged for the equipment as shown in this manual are the only ones allowed by LEGRAND (also called "Manufacturer" in the rest of the manual).
Any other use or configuration must be previously agreed with the Manufacturer in writing and the written agreement will become part of the installation and user manuals.
This manual is not a specification; therefore, LEGRAND reserves the right to make any changes to data without prior notice. It also complies with the directives and standards in force at the time of its release. The version of the manual updated to its latest release is available at ups.legrand.com.
The original text of this publication, drafted in English, is the only reference for the resolution of disputes of interpretation linked to translations into other languages.

Some operations are shown in graphic symbols that draw the attention of the reader to the danger or the importance they imply:

This symbol indicates a danger entailing a high degree of risk that, if not avoided, will lead to death or severe injury or considerable damage to the equipment, people, and things around it.

This symbol indicates a danger entailing a level of risk that, if not avoided, could lead to minor or moderate injury or material damage to the equipment, people, and things around it.

This symbol indicates essential information which should be read carefully.

1.1 Important Safety Instructions

This UPS contains HIGH VOLTAGES. All repairs and maintenance must be performed by AUTHORIZED SERVICE PERSONNEL ONLY. There are NO USER SERVICEABLE PARTS inside UPS.

The UPS is designed for commercial and industrial purposes.
- The UPS system contains its own energy source. The output terminals may carry live voltage even when UPS is disconnected to an AC source.
- To reduce the risk of fire or electrical shock, UPS installation must be in a controlled room where temperature and humidity are monitored. Ambient temperature must not exceed 40°C. The system is only for indoor use.
- Ensure all power is disconnected before installation or service.
- Service and maintenance should be performed by qualified personnel only..

Before working on this circuit
- Isolate Uninterruptible Power System (UPS)
- Then check for Hazardous Voltage between all terminals including the protective earth.

Risk of Voltage Back feed

The isolation device must be able to carry the UPS input current.

1. Safety

1.2 EMC

This is a product for commercial and industrial application in the second environment
- installation restrictions or additional measures may be needed to prevent disturbances.

1.3 Installation information

Installation must be performed by qualified personnel only.

- The cabinets must be installed on a level floor suitable for computer or electronic equipment.
- The UPS cabinet is heavy. If unloading instructions are not closely followed, cabinet may cause serious injury.
- Do not tilt the cabinets more than 10 degrees.
- Before applying electrical power to UPS, make sure the Ground conductor is properly installed.
- Installation and Wiring must be performed in accordance with the local electrical laws and regulations.
- The disconnection device should be chosen based on the input current and should break line and neutral conductors - four poles for three phases.

1.4 Maintenance

- Only qualified service personnel should perform the battery installation.
- The following PRECAUTIONS should be observed

1) Remove watches, rings, or other metal objects. (
2) Use tools with insulated handles.
3) Wear rubber gloves and boots.
4) Do not lay tools or metal parts on top of batteries or battery cabinets.
5) Disconnect the charging source prior to connecting or disconnecting terminal.
6) Check if the battery is inadvertently grounded. If it is, remove the source of grounding. Contacting any part of the ground might result in electrical shock. The likelihood of such shock can be prevented if such grounds are removed during installation and maintenance.

- UPS is designed to supply power even when disconnected from utility power. After disconnecting the utility and DC power, authorized service personnel should attempt internal access to the UPS.
- Do not disconnect the batteries while the UPS is in Battery mode.
- Disconnect the charging source prior to connecting or disconnecting terminals.
- Batteries can result in a risk of electrical shock or burn from high short circuit current.
- When replacing batteries, use the same number of sealed, lead-acid batteries.
- Do not open or mutilate the battery. Release electrolyte is harmful to the skin and eyes and may be toxic..

1.5 Recycling the used battery

- Do not dispose of the battery in a fire. Battery may explode. Proper disposal of battery is required. Refer to your local codes for disposal requirements.
- Do not open or mutilate the battery. Releasing electrolyte is harmful to the skin and eyes. It may be toxic.
- Do not discard the UPS or the UPS batteries in the trash. This product contains sealed, lead-acid batteries and must be disposed properly. For more information, contact your local recycling/reuse or hazardous waste center.
- Do not discard waste electrical or electronic equipment (WEEE) in the trash. For proper disposal, contact your local recycling/reuse or hazardous waste center.

A RISK OF EXPLOSION IF BATTERY IS REPLACED BY AN INCORRECT TYPE. DISPOSE OF USED BATTERIES ACCORDING TO THE INSTRUCTION.

1.6 Auto restart

- This UPS is configured for automatic restart after restoration of input power.
- Output power may be restored without warning.
- Electrical circuits and connected equipment may become energized automatically.
- Risk of electric shock, injury, or equipment damage exists if work is performed while the UPS is in auto-restart mode.

2. installation

2.1 Initial Inspection

1 - Visually examine if there is any damage inside and outside of packages in the process of transportation. If any damage, report it to the carrier immediately.
2 - Verify the product label and confirm the consistency of the equipment.
3 - If the equipment needs to be returned, carefully repack the equipment by using the original packing material that came with.

2.2 Installation Environment

1 - The UPS is designed for indoor use only and should be located in a clean environment with adequate ventilation to keep the environmental parameters within the required specification.
2 - Make sure that transportation routes (e.g. corridor, door gate, elevator, etc.) and the installation area can accommodate and bear the weight of the UPS, the external battery cabinet and handling equipment.
3 - The UPS uses forced convection cooling by internal fans. Cooling air enters the module through ventilation grills located at the front of the cabinet and exhausted through grills located in the rear part of the cabinet. Please do not block the ventilation holes.
4 - Ensure that the installation area is spacious for maintenance and ventilation.
5 - Keep the temperature of installation area below 40°C and humidity within 90%. The highest operating altitude is 1000 meters above sea level.
6 - If necessary, install a system of room extractor fans to avoid formation of room temperature. Air filters are necessary if the UPS is operated in a dusty environment.
7 - It is recommended that you parallel the external battery cabinets to UPS. The following instructions of clearances are suggested:
  • Keep a clearance of 300 mm from the top of the UPS for maintenance, wiring and ventilation.
  • Keep a clearance of 750 mm from the back of the UPS and the external battery cabinets for ventilation.
  • Keep a clearance of 1000 mm from the front of the UPS and the external battery cabinets for maintenance and ventilation.
8 - For safety concerns, we suggest that you should:
  • Equip with CO2 or dry powder fire extinguishers near the installation area.
  • Install the UPS in an area where the walls, floors and ceilings were constructed by fireproof materials.
9 - Do not allow unauthorized personnel to enter the installation area. Assign specific personnel to keep the UPS key.

2.3 Unpacking

1 - Use a forklift to move the product to the installation area. Refer to Figure 2-1. Please make sure the bearing capacity of the forklift is sufficient.
2 - Remove cartons and foam.
3 - Place a ramp in front of the cabinet. Refer to Figure 2-2.

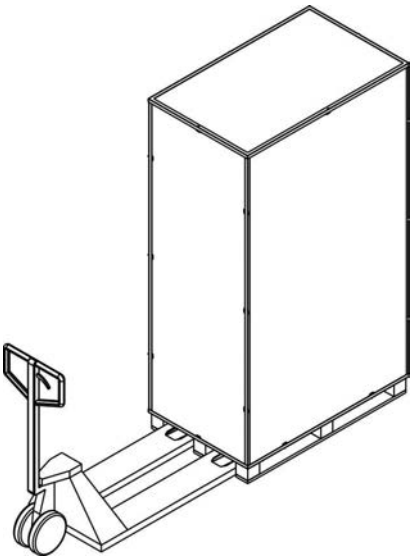

Figure 2-1

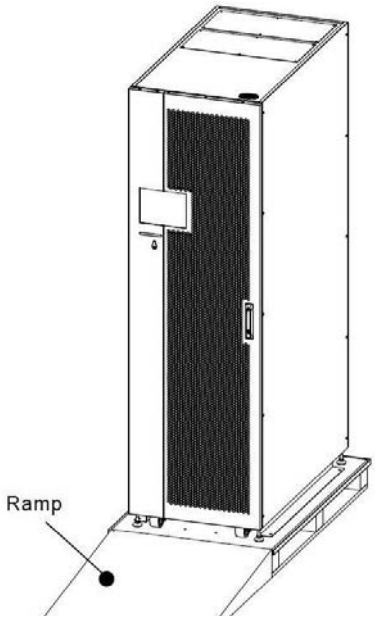

Figure 2-2

2. installation

4 - Remove 2 fixing cabinet plates and loosen leveling feet by rotating them counterclockwise. Then, move the cabinet from the pallet. Refer to Figure 2-3.
5 - To fix the cabinet in position, simply rotate leveling feet clockwise. Refer to Figure 2-4.

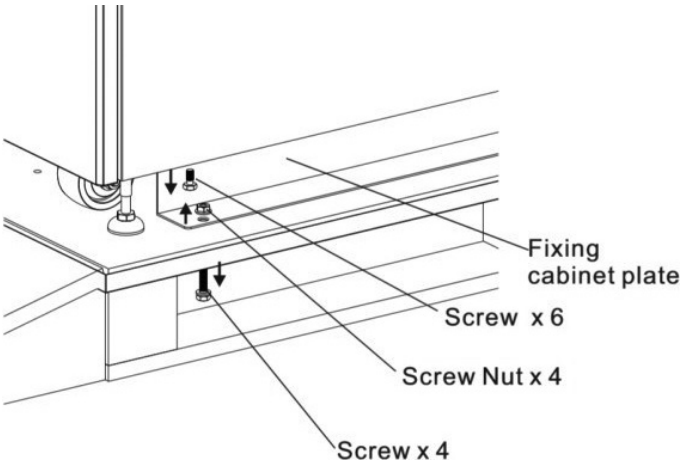

Figure 2-3

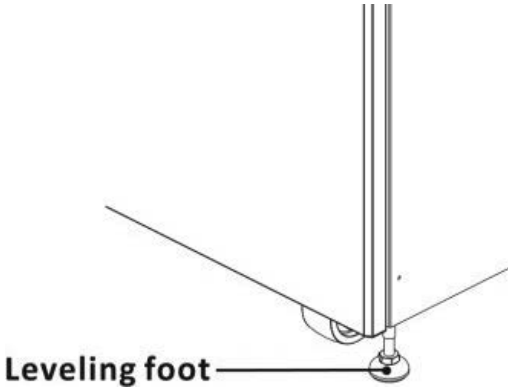

Figure 2-4

2.4 Moving the Cabinet

- The UPS is fixed on the pallet with 2 fixing cabinet plates. When removing it, pay attention to the movement of the castors to avoid accidents.
- The cabinet can be pushed forward or backward only. Pushing it sidewalk is not allowed. When pushing the cabinet, pay attention not to overturn it as the gravity in the center is high.

1 - If you need to move UPS over a long distance, please use appropriate equipment like a forklift. Do not use the UPS castors to move over a long distance.
2 - After the UPS has been removed from the pallet to ground, we suggest that at least three people move the UPS to the installation area. One person holds a lateral side of the UPS with hands, another holds the other lateral side of the UPS with hands, and the other person pushes the UPS either from the front side or from the back side to the installation area and avoid tipping the UPS.
3 - The castors are designed to move on level ground. Do not move the UPS on an uneven surface. This might cause damage to the castors. Toppling UPS could also damage the unit.
4 - Ensure that the weight of UPS is within the designated bearing capacity of any handling equipment.
5 - At the bottom of the UPS, the four caters help you to move the UPS to a designated area. Before you move the UPS, please turn the four leveling feet counterclockwise to raise them off the ground. This protects the leveling feet from damage when moving the UPS.
6 - Fix the cabinet firmly to the ground with screwing the fixing cabinet plate. Refer to Figure 2-6

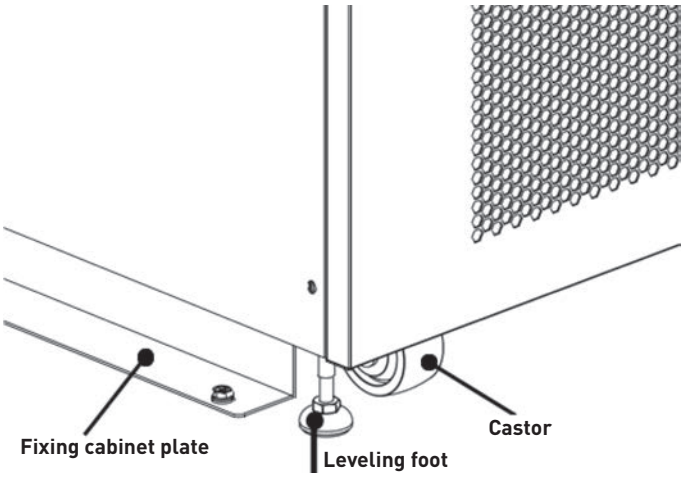

Figure 2-6

UPS KEOR MOD+ 420 - 600 kW Modular UPS (60 kW Power Module)

2.5 Types of UPS Cabinet

The cabinets don't have battery module compartments inside. The battery must be located externally.
Please consider the external battery space and wiring gauge for installation.

Extended Series		
	Model	
	42U-420	42U-600
	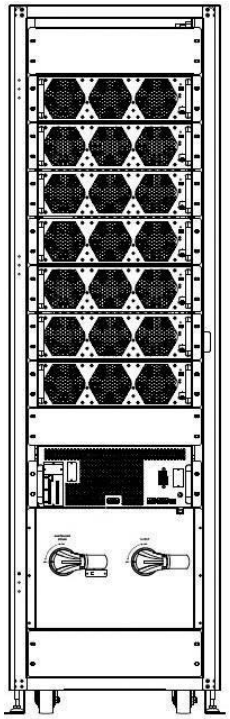	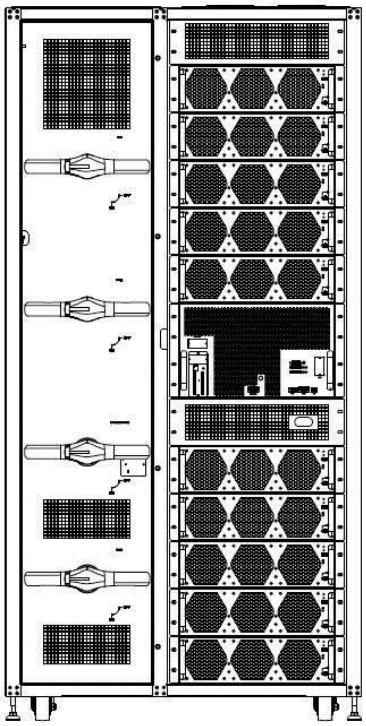
Cabinet Height	42U	42U
Switch Unit	2	2+2 (optional)
STS	1	1
Max. Power Module	7	10
Max Power	420kVA	600kVA
Power Module Capacity	60kW	60kW

2. installation

2.6 Exterior

The cabinets don't have battery module compartments inside. The battery must be located externally.
Please consider the external battery space and wiring gauge for installation.
In front of the UPS, there are control interface (LCD Panel) and door lock.
The side panels are lockable. The casters at the bottom of the UPS cabinet can be used to move over short distances. There are four leveling feet to fix and stabilize the UPS cabinet on the ground. Refer to Figure 2-5.
Inside the cabinet, there are Breakers, STS Module and Power Module slots. All wiring terminal blocks are located in the back of the cabinet.

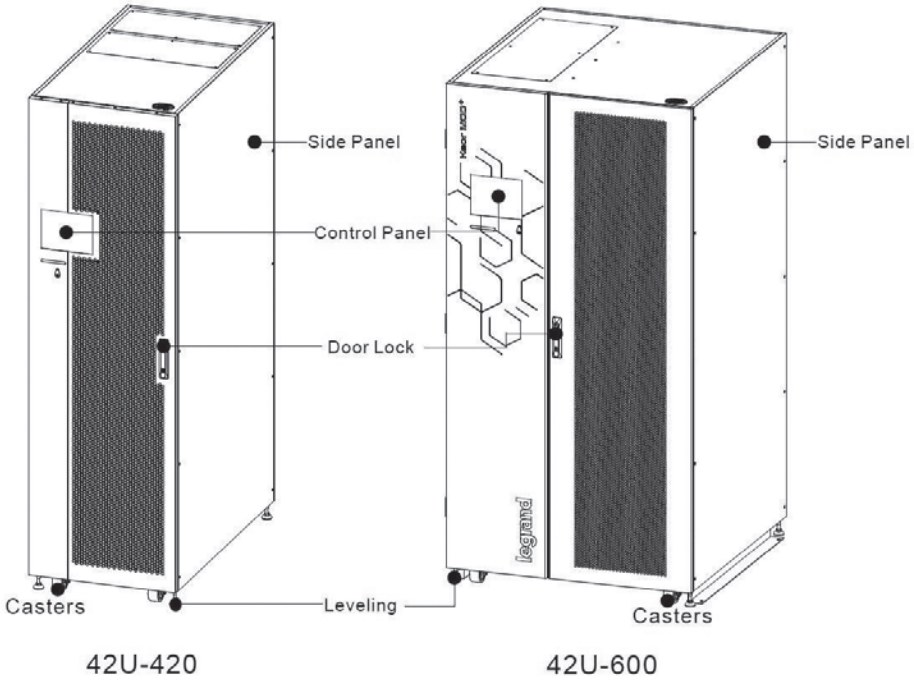

Figure 2-5

2.6.1 Mechanical Data

Dimensions		
UPS Capacity (kVA)	420	600
Width (mm)	600	1000
Depth (mm)	1100	1065
Height (mm)	2010	2000

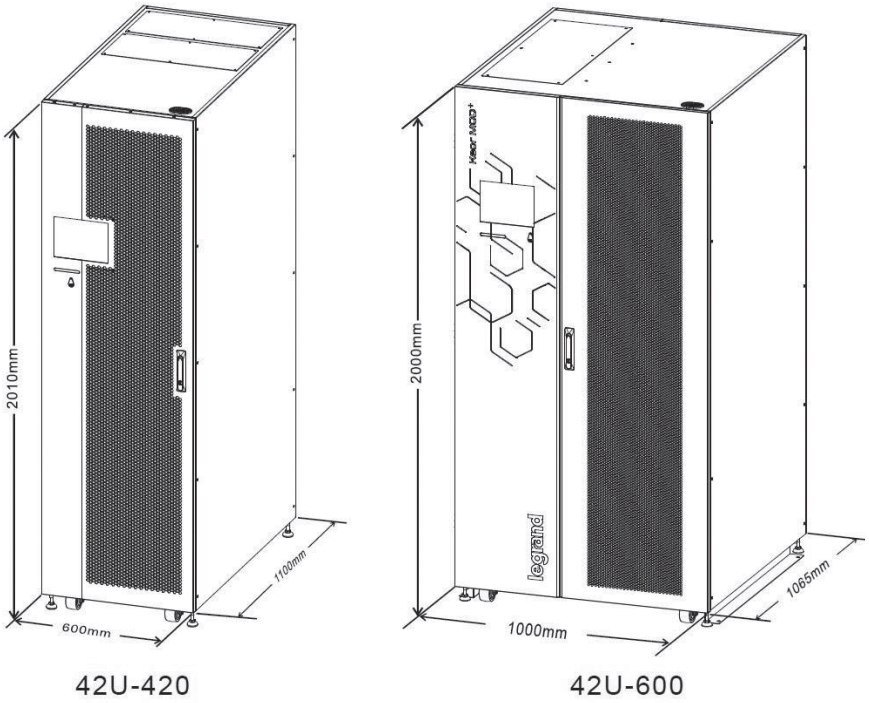

2.6.2 Front View

Unlock and open the front door and you will see all the configurations as below:
420kVA cabinet is equipped with Maintenance Bypass Switch, Output Switch, STS Module and Power Module slots.
600kVA cabinet is equipped with Maintenance Bypass Switch, Output Switch, STS Module and Power Module slots.

1- Switch Compartment
2 - STS Module
3 - Power Module

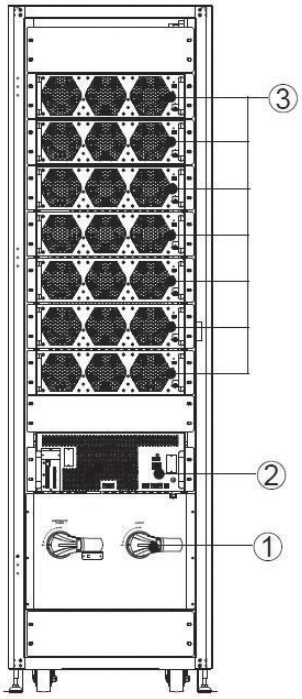

42U-420

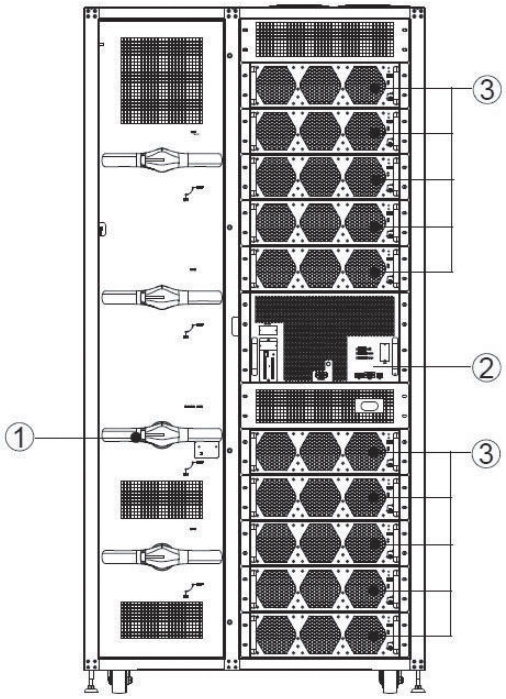

42U-600

2.6.3 Rear View

Unlock and open the rear door and you will see the rear panel of UPS.

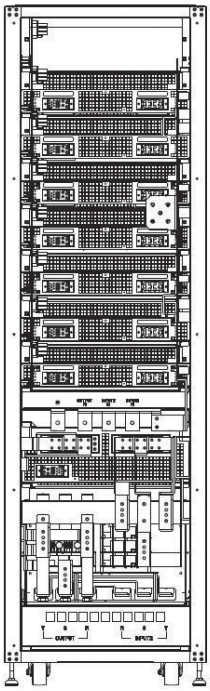

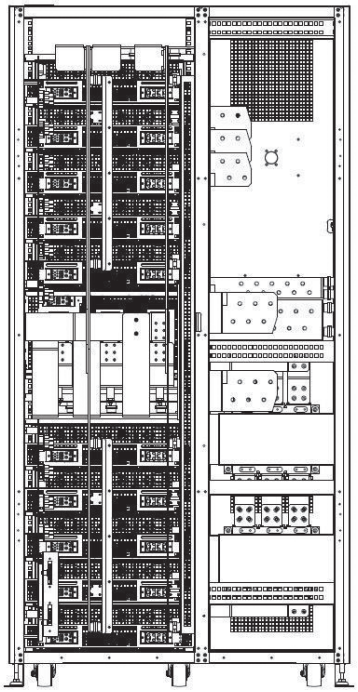

2. installation

2.7 Internal Mechanisms

2.7.1 Switches

After opening the front door, there are different breakers installed.
42U-420 cabinet: Maintenance Switch and Output Switch
42U-600 cabinet: Maintenance Switch and Output Switch. Input Switch and Bypass Switch are optional.

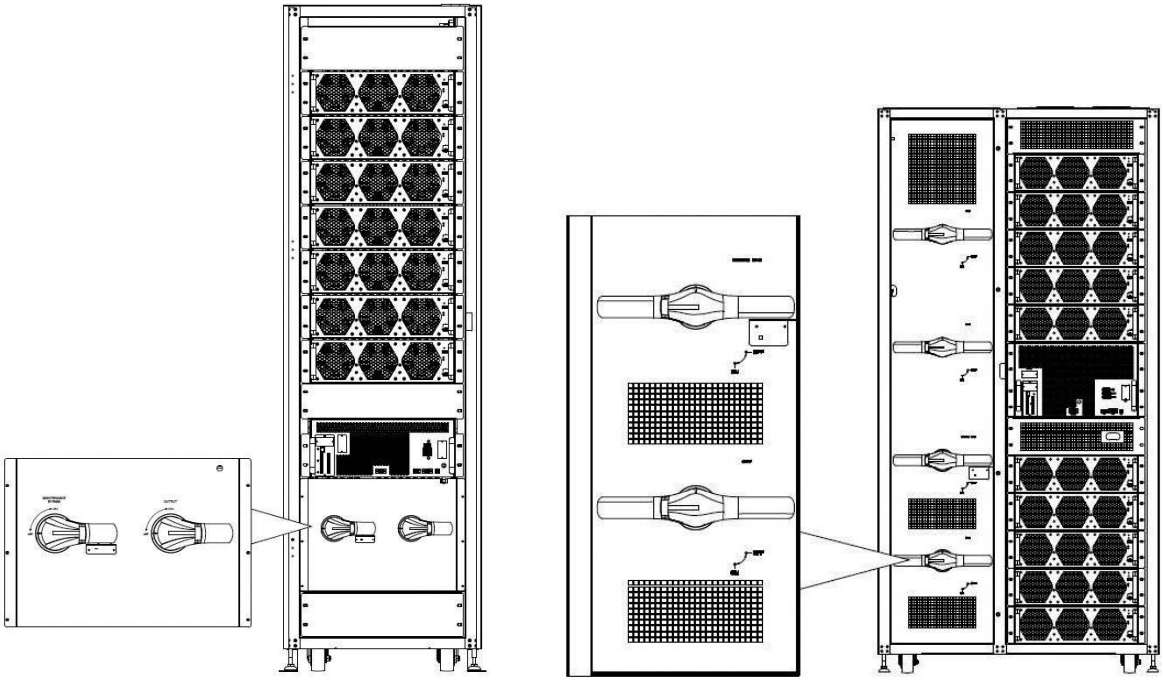

Figure 2-11 Switch (front view)

2.7.2 Wiring Terminal Blocks

Open the UPS's back doors and you will see the wiring terminal block. For UPS cabinet wiring, please refer to Figure 2-13.

No.	Item	Function	Description
1	Output Block	Connects the critical loads	Includes R, S, T and Neutral terminals.
2	Bypass Input Block	Connects bypass AC source	Includes R, S, T and Neutral terminals.
3	Main Input Block	Connects main AC source	Includes R, S, T and Neutral terminals.
4	For UPS Grounding	Protective earthing	Includes one grounding terminal.
5	Battery Input Block	Connects an external battery cabinet	Includes Positive (+), Negative (-) and Neutral (N) terminals.

UPS KEOR MOD+ 420 - 600 kW Modular UPS (60 kW Power Module)

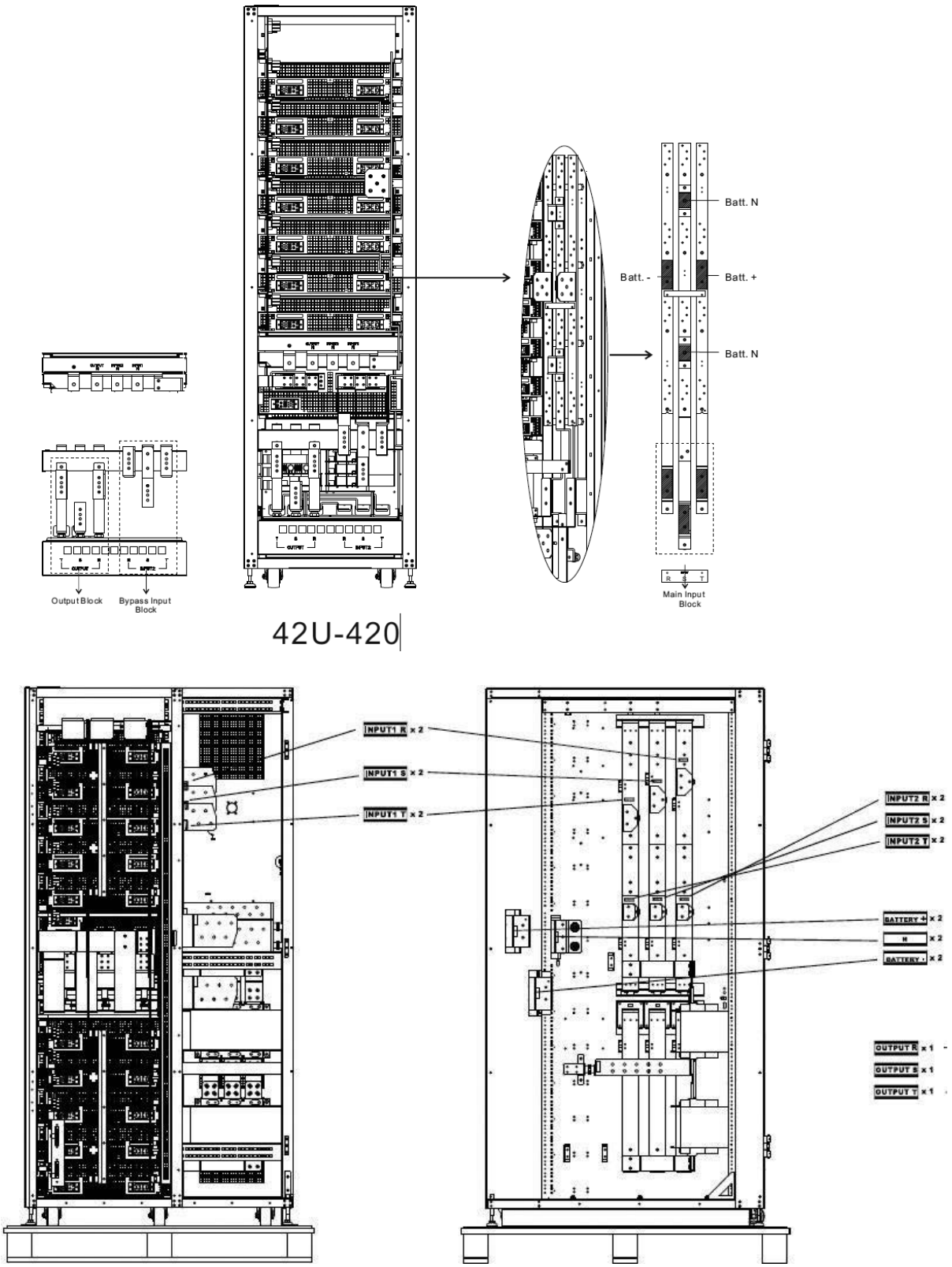

Figure 2-13 Terminal Blocks

2. installation

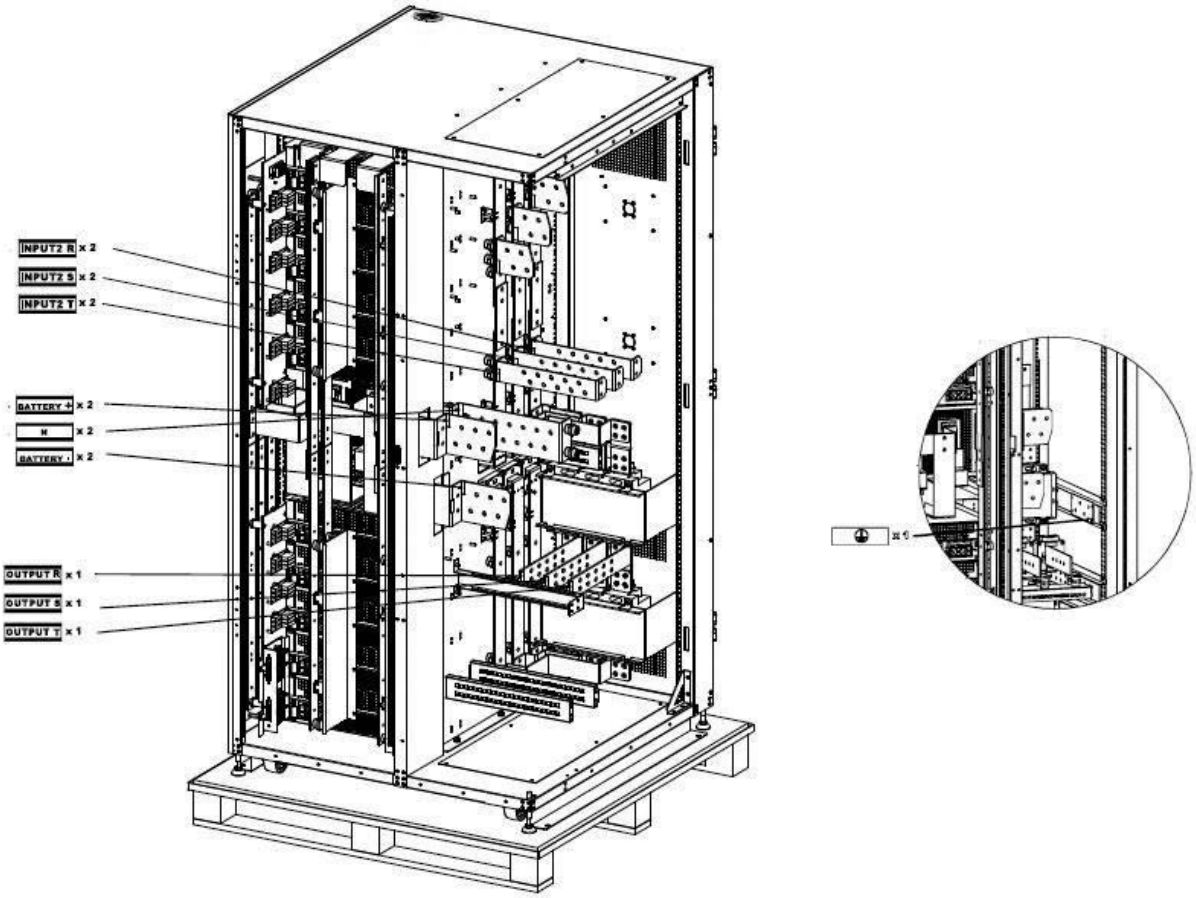

Figure 2-13 Terminal Blocks

2.8 Control Panel

2.8.1 LCD Display

Through the touch LCD display, the user can easily understand the operational mode of UPS. In addition, the measurement, parameters, versions of firmware and warnings can be browsed in the friendly interface. For detailed information, please refer to Chapter 4.

2.8.2 LED BAR Indicators

Color	Definition
Green	Normal.
Yellow	UPS alarm / Bypass mode / Self-loading mode.
Red	UPS fault.

2.8.3 EPO Key

The Emergency Power off (EPO) function.

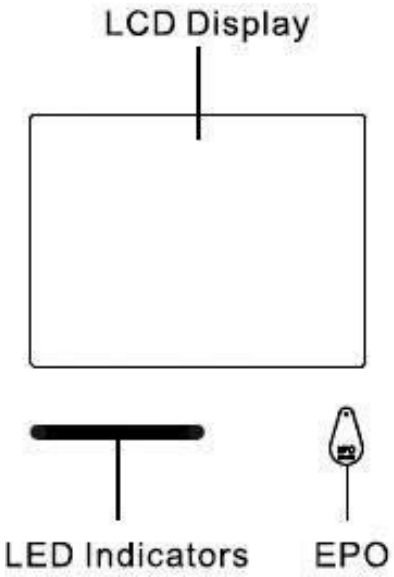

2.9 Introduction of Modules

The design of Power Module and STS Module make maintenance and replacement quick and easy. The modular and hot-swappable design of Power Module makes it a highly cost-effective solution to meet your power requirement & handle the critical load application. The number of Power Modules installed in the UPS can be based on the initial needs, which can be extended up to the maximum designed capacity of cabinet. Once the power requirement increases, you can easily install more Power Modules without interrupting the operation of the system.

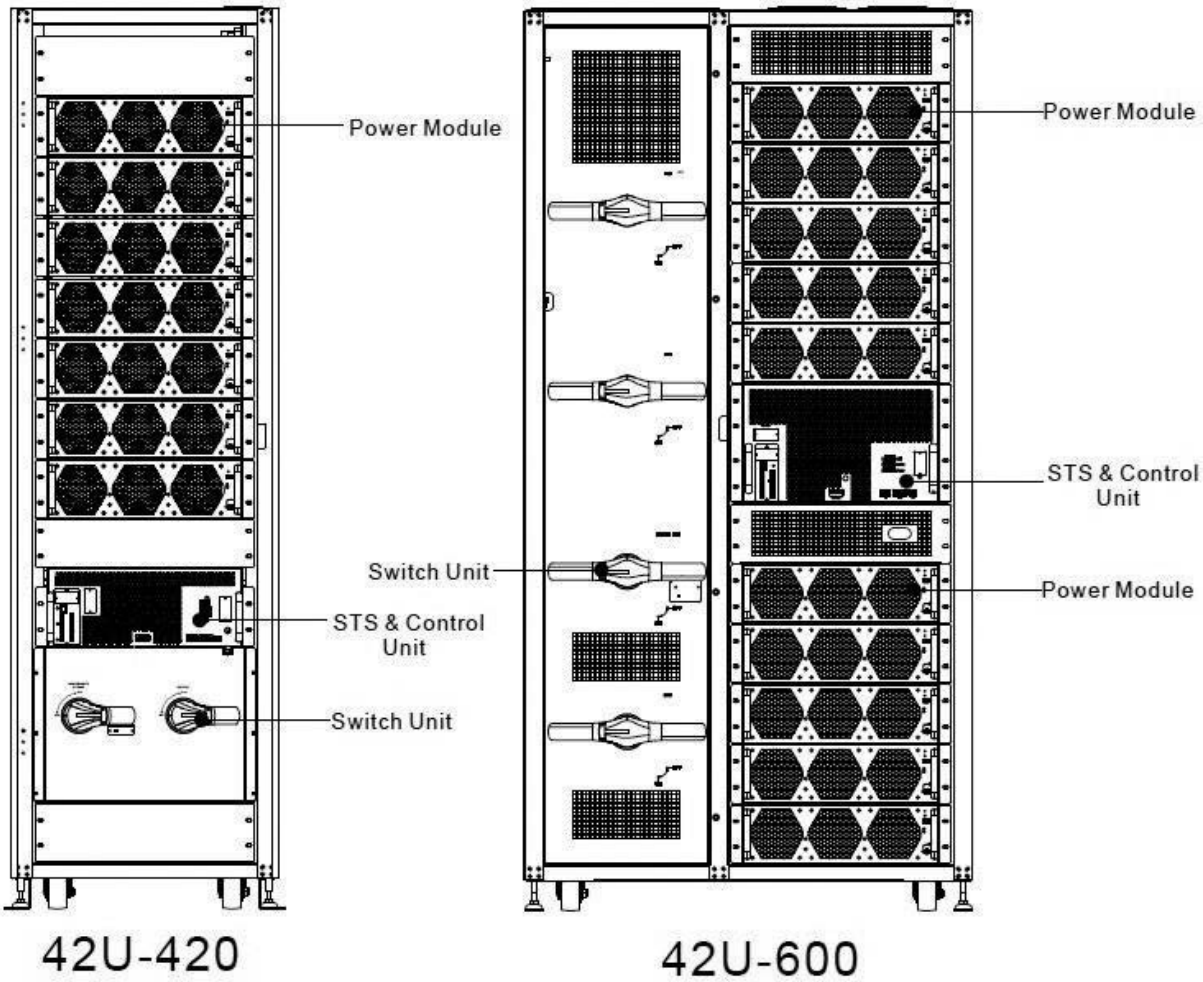

Figure 2-15 Front View

2.9.1 STS Module

The STS Module is provided in the cabinet, as an inbuilt standard feature. It provides the bypass power when UPS is in Bypass Mode.

In addition to offering bypass power, it includes some communication interfaces. For detailed information, please refer to Chapter 5.

No.	Item	Description
1	Extra Comm. Card	This card can enhance the communication capability of UPS system and provide another SNMP slot and some dry contact ports.
2	LCD Port	This port connects to Control Panel with an installed cable from factory.
3	RS232 port	Local communication interface.
4	USB port	Local communication interface.
5	SNMP Slot	This slot can work with an optional card such as SNMP, AS400 or Modbus card.
6	Dry contact ports	For detailed information, please refer to Chapter 5.
7	BMS Slot	Communicating with lithium batteries

2. installation

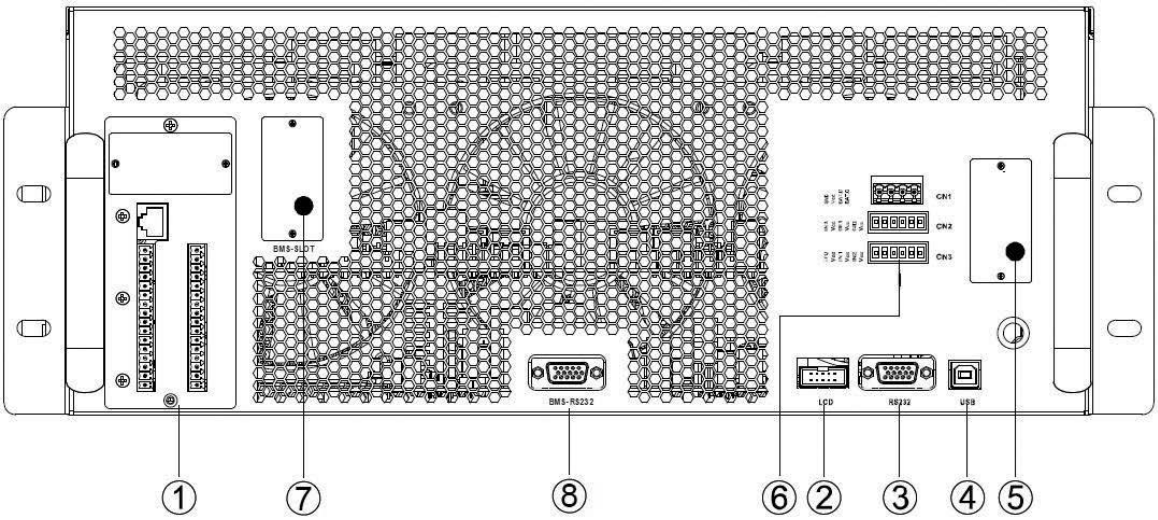

Figure 2-16 STS Module

2.9.2 Power Module

Each Power Module is shipped with its own package. It must be installed during the UPS system installation.

The capacity of each Power Module is 60kVA/60kW. It includes a power factor correction rectifier, a battery charger, an inverter and control circuit.

No.	Item	Description	
1	Fan	The Power Module uses forced convection cooling by these fans. Cooling air enters the module through ventilation grills in the front side and exhausts through grills located in the rear of the module. Please do not block the ventilation area, as there will be an increase in internal module temperature if the ventilation is blocked & hot air doesn't get exhausted.	
2	Ready Switch	Unlock it before removing the Power Module. Lock it when the Power Module is well installed. Then the Power Module can start to work.	
3	DIP Switches	There are five DIP switches for Power Module address setting. In the same cabinet, each Power Module ID MUST be exclusive. The setting method is shown in **Table 2-1/Table2-2**.	
4	Battery Start Button	When AC input is not existing, use this button to start battery power for UPS.	
5	FAULT LED	ON	The Power Module is in fault condition, or the Ready Switch is unlocked.
		ON/OFF 0.5 sec	The Power Module IDs conflict / initialization
		ON/OFF 0.15 sec	The STS Module is not found.
6	RUN LED	ON	The Power Module normally works as a slave module.
		ON/OFF 0.5 sec	The Power Module normally works as a master module.
		ON/OFF 0.15 sec	CAN Bus communication failure.

UPS KEOR MOD+ 420 - 600 kW Modular UPS (60 kW Power Module)

Figure 2-17

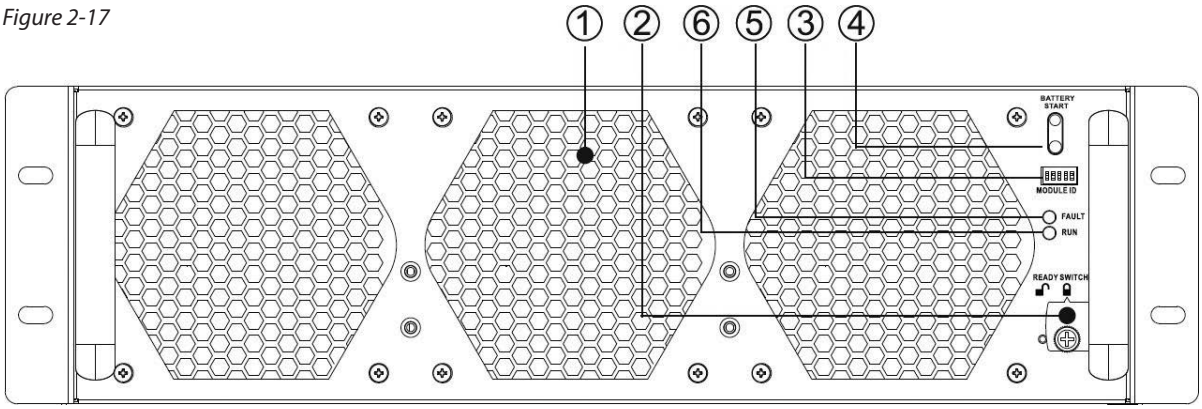

TABLE 2-1 DIP switch setting and Module Address for 420K

Cabinet A (00)	
Module Address	**DIP SWITCH**
1	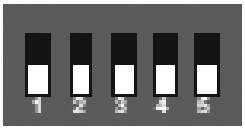
2	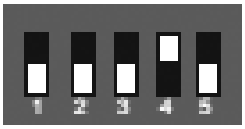
3	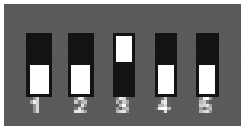
4	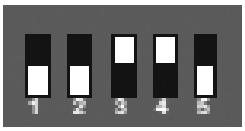
5	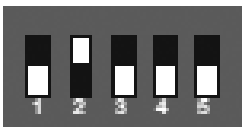
6	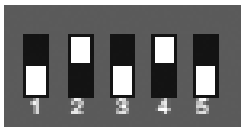
7	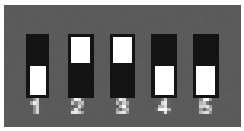
8	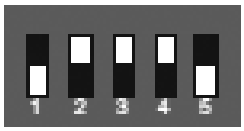

Cabinet B (10)	
Module Address	**DIP SWITCH**
11	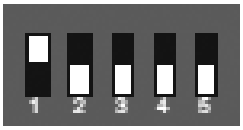
12	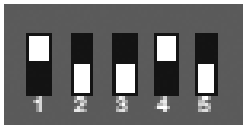
13	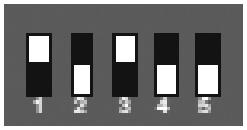
14	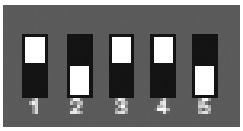
15	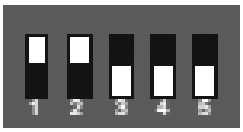
16	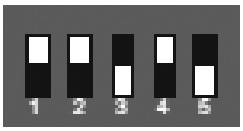
17	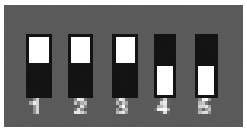

2. installation

Cabinet C (20)	
Module Address	**DIP SWITCH**
21	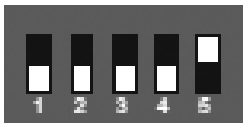
22	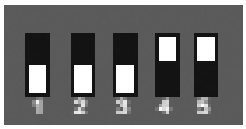
23	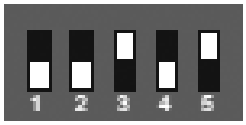
24	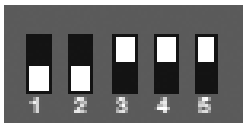
25	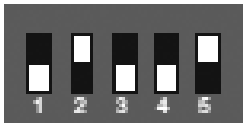
26	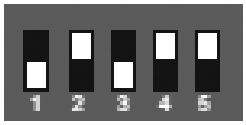
27	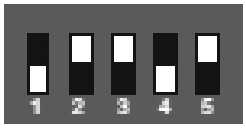
28	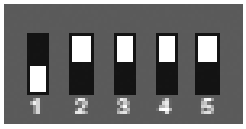

Cabinet D (30)	
Module Address	**DIP SWITCH**
31	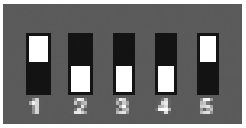
32	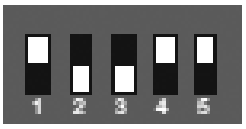
33	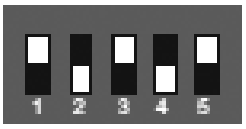
34	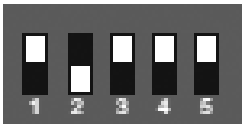
35	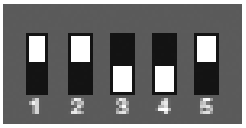
36	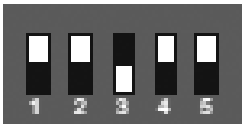
37	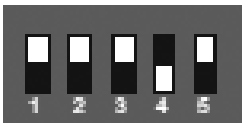

TABLE 2-2 DIP switch setting and Module Address for 600K

RACK A (00)		RACK B (20)		RACK C (40)	
Module Address	DIP SWITCH	Module Address	DIP SWITCH	Module Address	DIP SWITCH
1	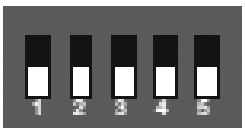	21	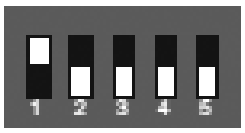	41	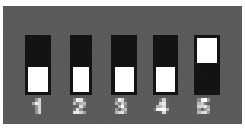
2	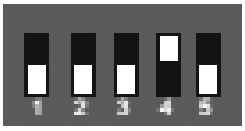	22	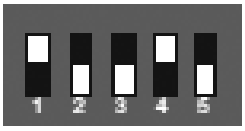	42	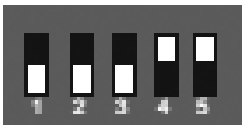
3	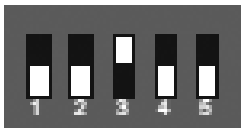	23	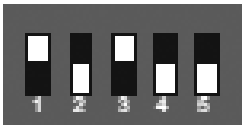	43	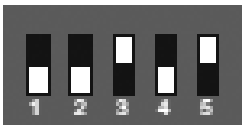
4	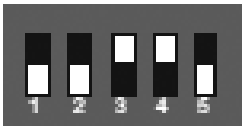	24	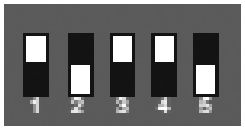	44	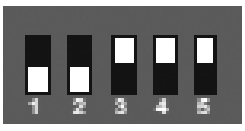
5	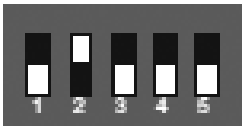	25	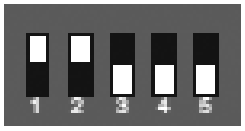	45	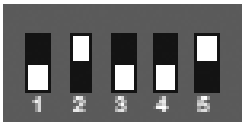
6	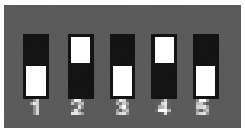	26	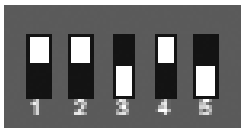	46	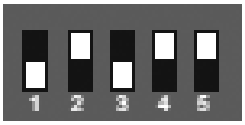
7	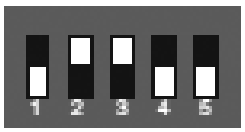	27	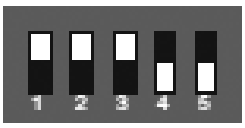	47	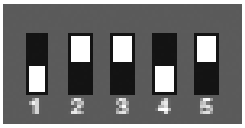
8	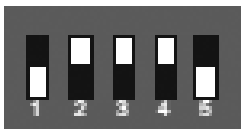	28	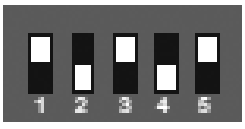	48	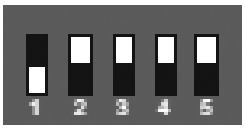
9	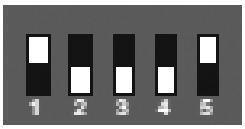	29	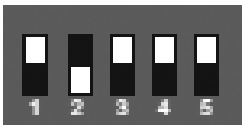	49	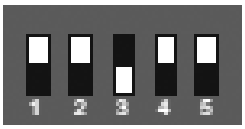
10	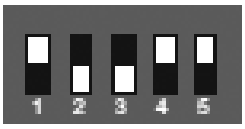	30	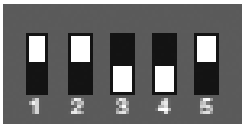	50	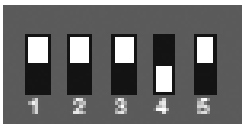

Power Module ID Assignment

The Power Module's ID is shown in Table 2-1/Table2-2. The DIP switches (3) are mounted in the front panel as shown in **Fig 2-17.**

For Parallel UPS system application, please follow the instructions in Chapter 9 "UPS Installation for Parallel Rack System".

2. installation

2.10 Power Cable

Please follow the local wiring regulations & environmental conditions and compliance with local safety related regulation.

2.10.1 AC input and output maximum current and power cable configuration

Power rating	420 KVA	600 KVA
Current (A)	770	1100
Power cable (mm^2)	240*2	240*3
Fixation torque force (lb-in)	60	60

Notice: Installer must consider the max. current and wiring gauge when considering future extension.

2.10.2 DC input maximum current and power cable configuration

Power rating	420 KVA	600 KVA
Current (A)	1400	2000
Power cable (mm2)	240*4	300*4
Fixation torque force (lb-in)	60	60

2.11 Wiring

- Before connecting any cable, make sure the AC input and battery power is completely cut off.
- Make sure the breakers, Main Breaker, Maintenance Breaker, Output Breaker and battery breaker are all in **OFF** position.
- In order to have good heat dissipation, the power cables MUST come into the cabinet from bottom of the cabinet. Or the cables will block the cooling ventilation and make the over temperature failure.

2.11.1 Installation Drawing

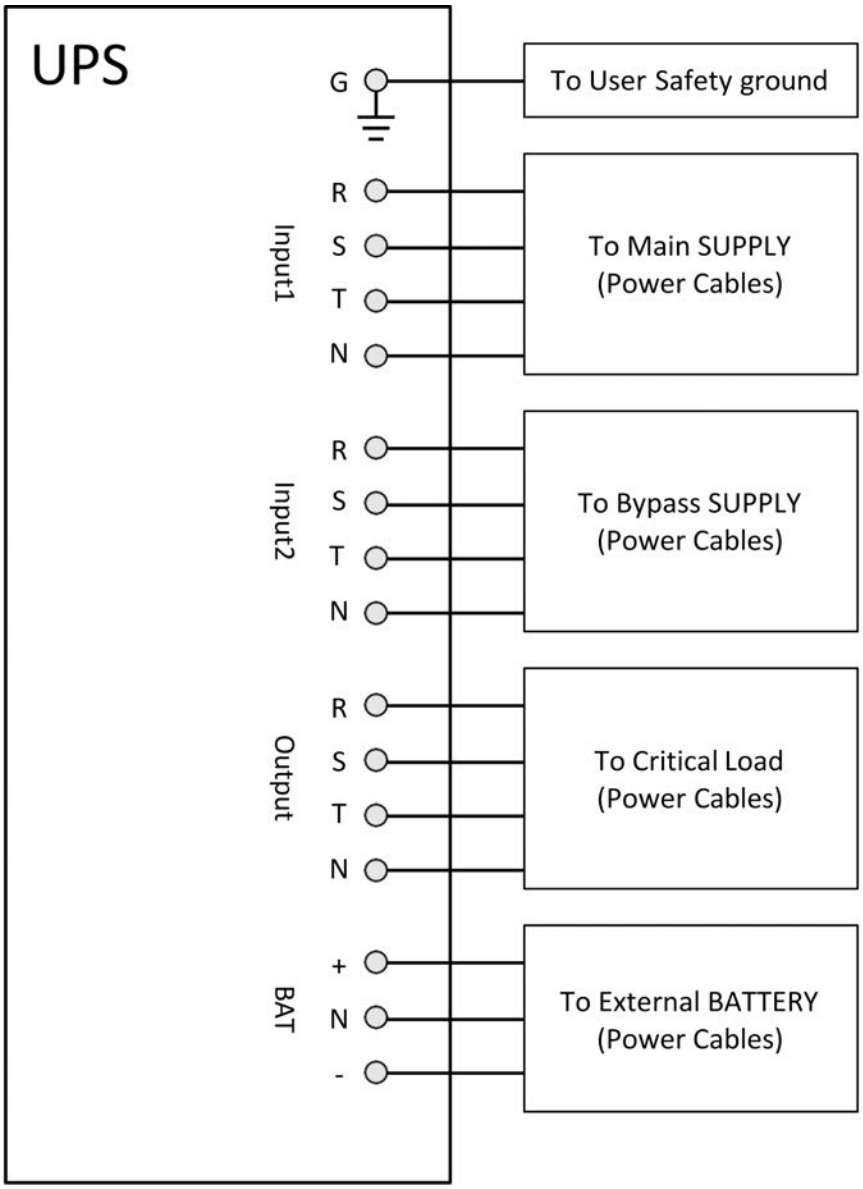

2.11.2 AC source connection

For **Single input** application, connect Input1 to the AC power source and use 3 short wires to connect Input1 and Input2.
For **Dual input** application, connect Input1 to the Main AC power source and connect Input2 to the Bypass power source.
The sequence of three phases, R, S and T must be connected accordingly. The wrong sequence will alarm a warning when the UPS is powered.
The Neutral must be connected firmly & a warning message will be indicated if the Neutral is not connected properly.

2. installation

2.11.3 External Battery Cabinet Connection

After the battery is completely installed, be sure to set up nominal battery voltage, battery capacity and maximum charging current in LCD setting. Otherwise, if battery setting is different from actual installation, the UPS will keep warning. Please refer to section 4.2.6.3 and **Table 4-9** for the details.

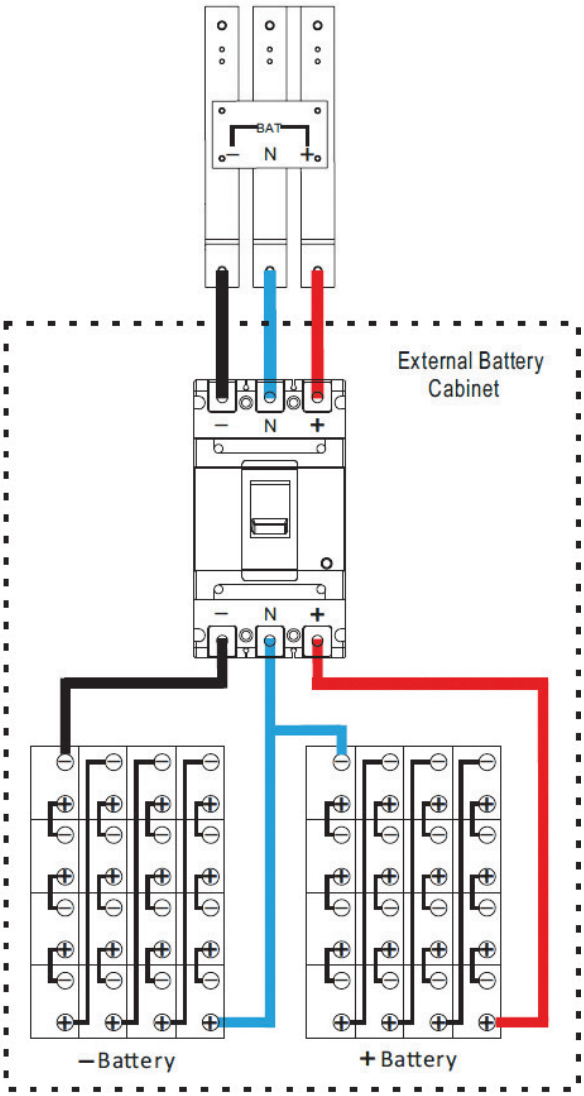

2.12 Power Module Installation

⚠ The weight of Power Module is over 30kg. Therefore, at least two people are required for handling.

2.12.1 Insert the Power Module

1) Adjust the DIP switch positions to set the different Module Address. Refer to **Table 2-1/Table2-2**.

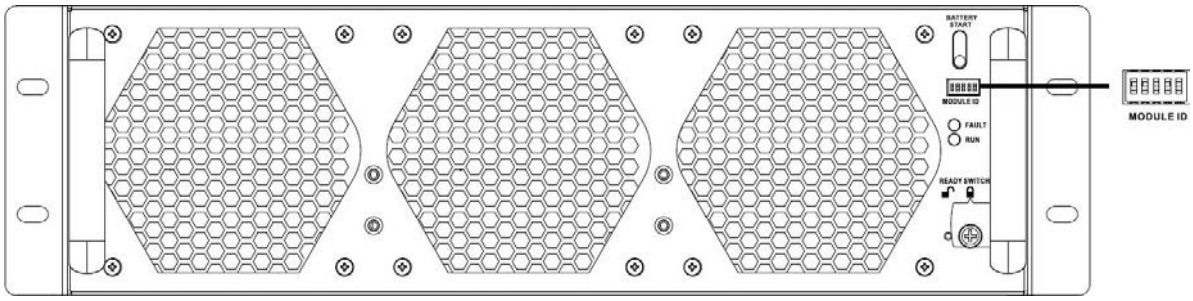

UPS KEOR MOD+ 420 - 600 kW Modular UPS (60 kW Power Module)

2) Switch he ready switch on the front panel of the module to the "🔓" position.
3) Insert the Power Module into an unoccupied slot by two people.

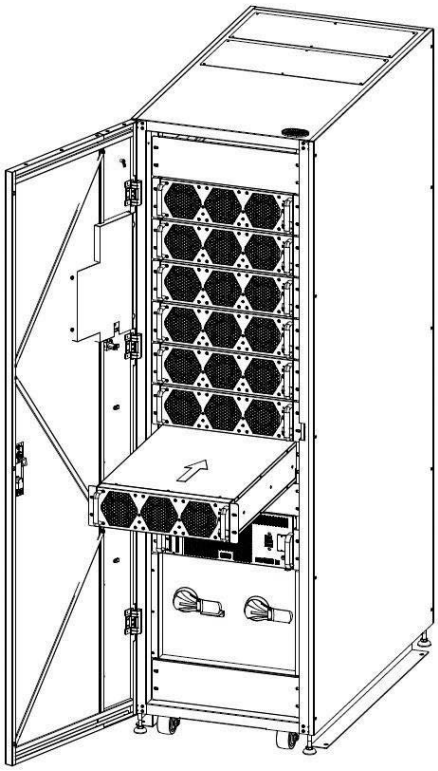

4) Secure the Power Module to the cabinet by fixing the screws on the front panel of the Power Module.

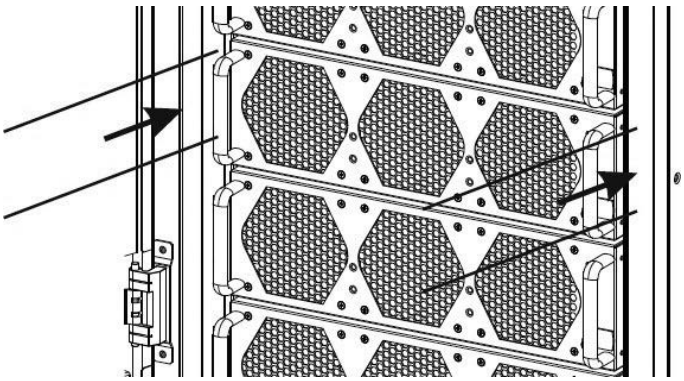

5) Move the ready switch to the "🔒" position.

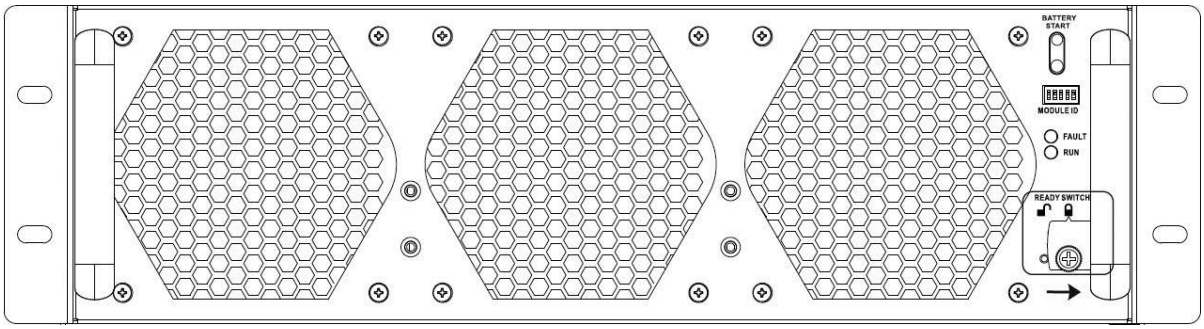

2. installation

2.12.1 Removal of Power Module

- Before removing any Power Module, make sure the remaining Power Modules can support the critical loads.
- At least one Power Module MUST stay in the UPS cabinet except the UPS system is operating in Maintenance Bypass Mode.

1) Switch the ready switch to the " 🔒 " position.
2) FAULT LED (RED) indicator is lit to indicate the Power Module output is off and disconnected from UPS system.

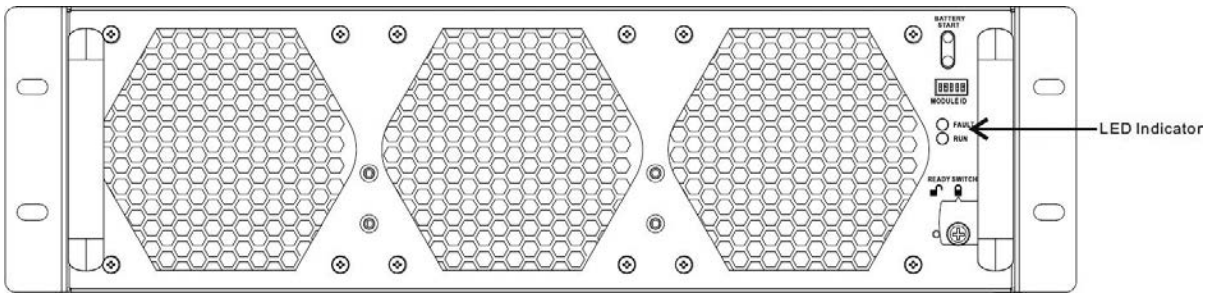

3) Use a screwdriver to remove the four screws from fixing holes.
4) Two people pull out together and remove the Power Module from its slot.

2.13 Backfeed Protection

Backfeed protection device shields the bypass line from static switch failure.

The UPS has no back feed device inside. It should be installed externally **by following method.**

- An external disconnect device, coil is energized by input voltage. When input AC is lost, it will open the contactor.
- An external disconnect device is controlled by UPS interface. When input power is lost, it will open the contact controlled by UPS. Please refer to the extra communication card SOP. Use extra com. configuration software tool to set back feed function. Refer to chapter 5.

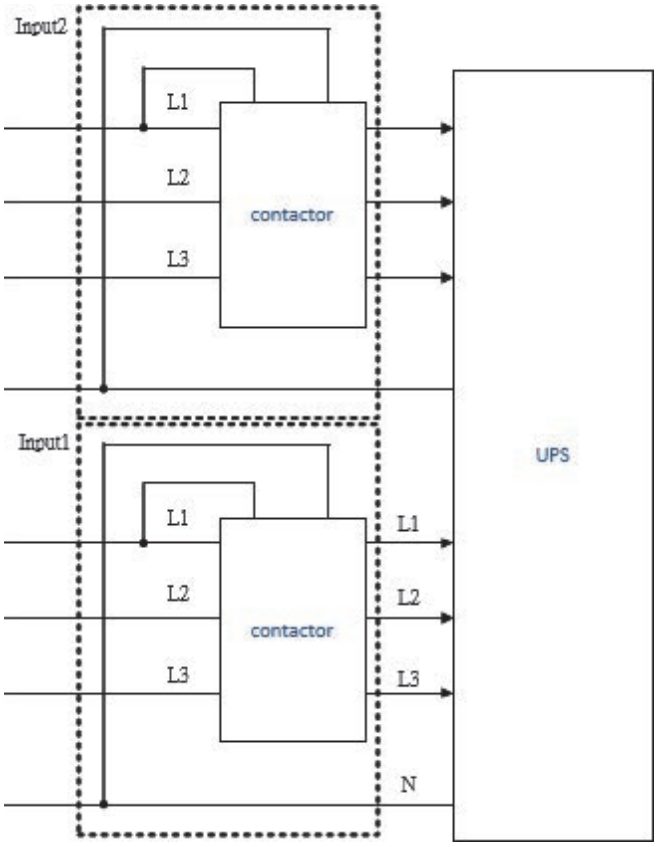

3. Operation Mode and UPS Operation

3.1 Block diagram of UPS

Wiring diagram for dual inputs with two-breaker

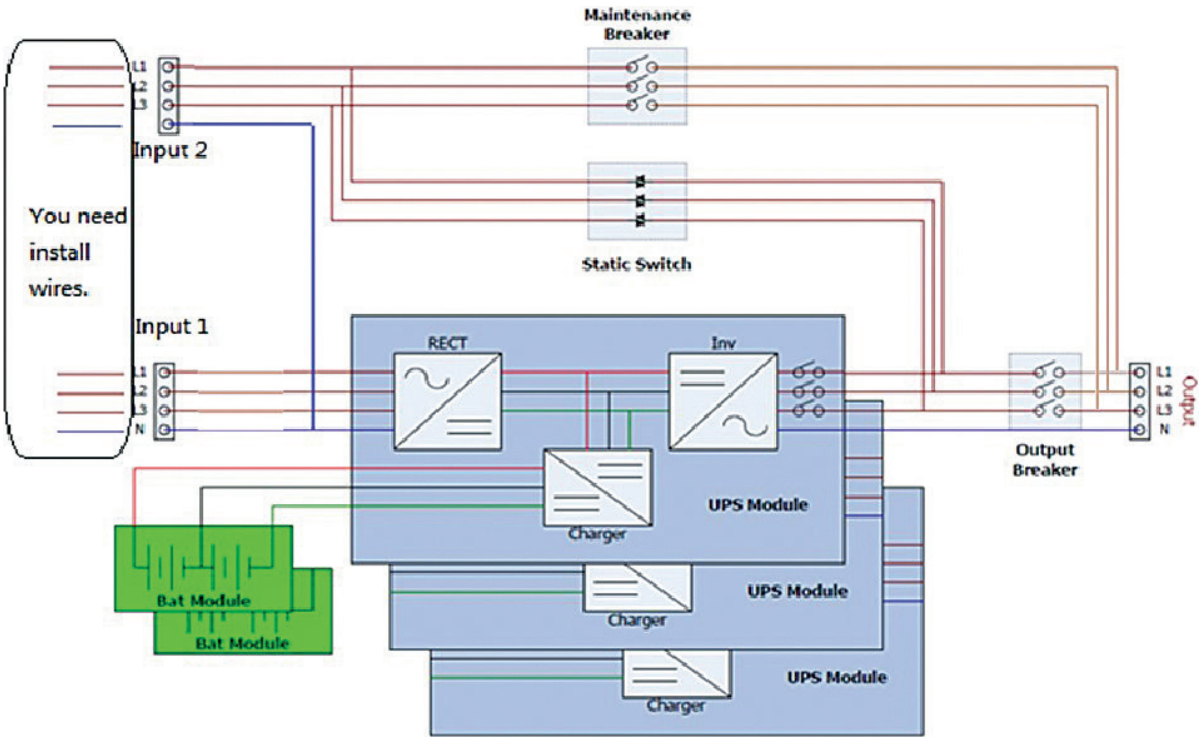

Wiring diagram for single input with two-breaker

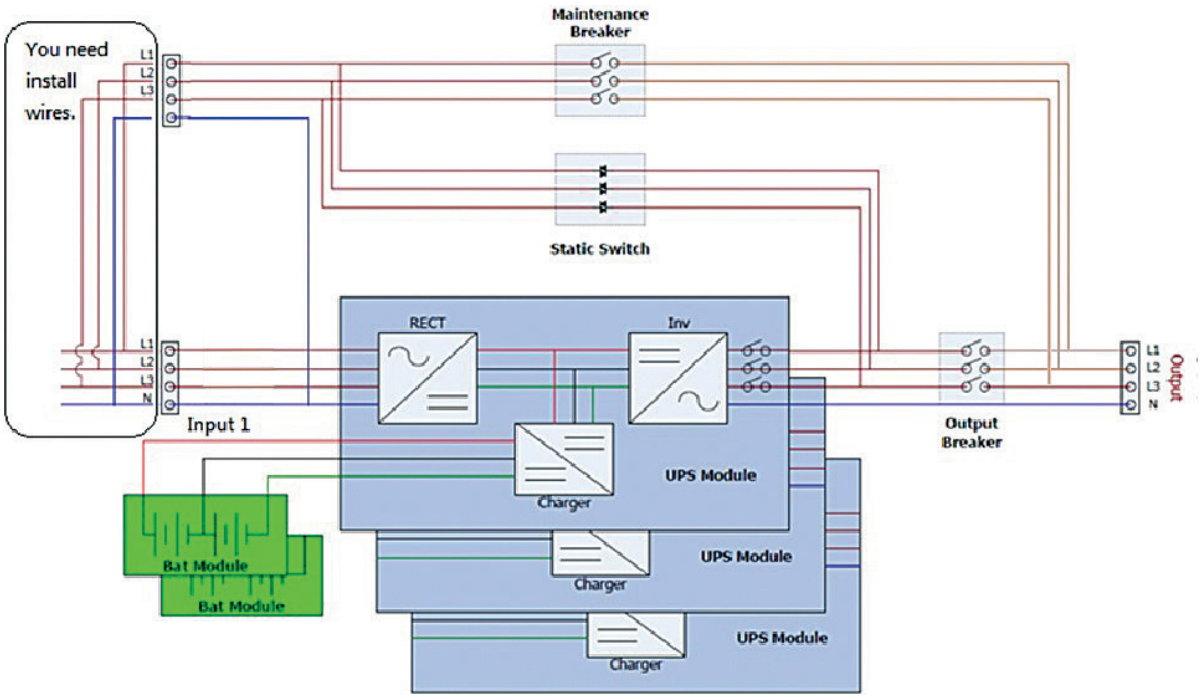

3. Operation Mode and UPS Operation

3.2 Operation Mode

This modular UPS is a three-phase, four wire on-line, double-conversion and reverse-transfer UPS that permits operation in the following modes:

- Standby Mode
- Line Mode
- Battery Mode
- Bypass Mode
- ECO Mode
- Shutdown Mode
- Maintenance Bypass Mode (manual bypass)

3.2.1 Standby Mode

Upon connecting to utility input power, the UPS is in Standby mode before UPS is turned on (if BYPASS enable setting is Disabled), and charger function will be active when the battery is present. The load is not powered under this mode.

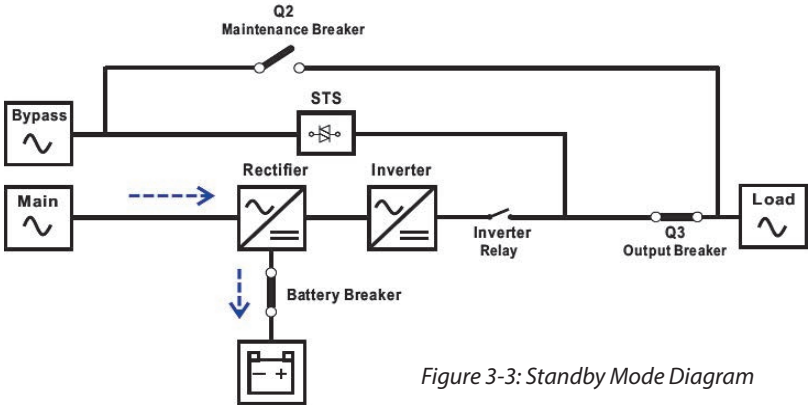

Figure 3-3: Standby Mode Diagram

3.2.2 Battery Mode

In Line Mode, the rectifier derives power from the utility power and supplies DC power to the inverter and the charger charges the battery. The inverter filters the DC power and converts it into pure and stable AC power to the load.

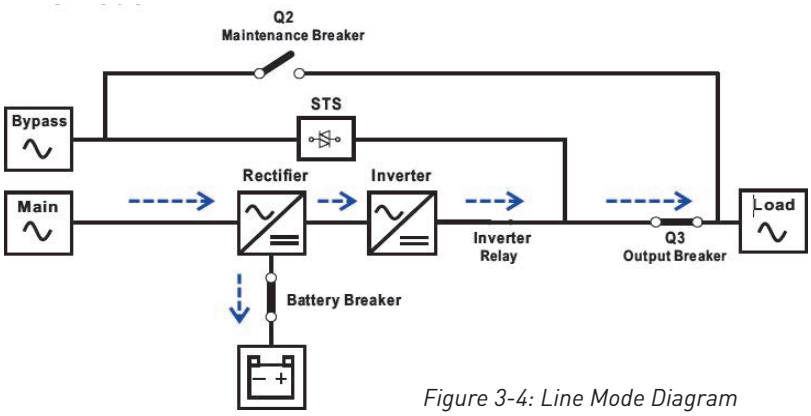

Figure 3-4: Line Mode Diagram

3.2.3 Line Mode

The UPS automatically transfers to Battery mode if the utility power fails. There is no interruption in power to the critical load upon failure. In battery mode, the rectifier derives power from the battery and supplies DC power to the inverter. The inverter filters the DC power and converts it into pure and stable AC power to the load.

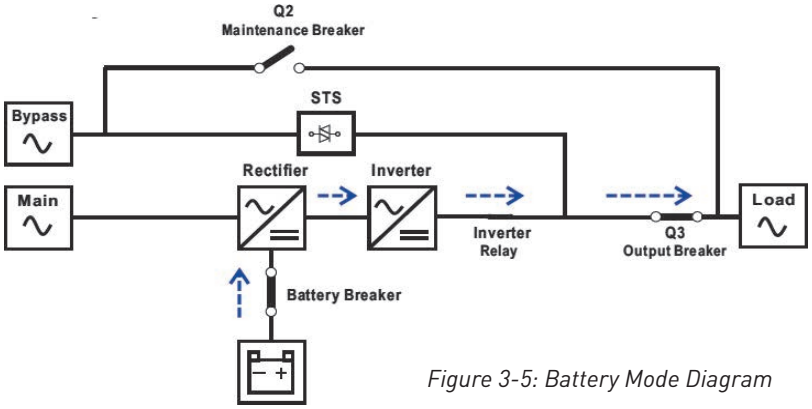

Figure 3-5: Battery Mode Diagram

3.2.4 Bypass Mode

Upon connecting to utility input power, the UPS is in Bypass mode before UPS is turned on (if BYPASS enable setting is Enabled), and charger function will be active when battery is present. After UPS has been turned on, if the UPS encounters abnormal situations (over-temperature, overload, etc.), the static transfer switch will perform as a transference of the load from the inverter to the bypass source with no interruption. If the transference is caused by a recoverable reason, the UPS will turn back to line mode when the abnormal situation is solved.

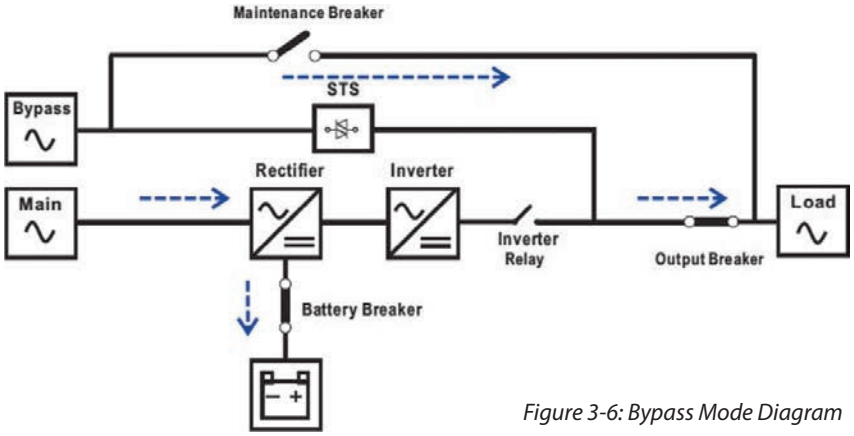

Figure 3-6: Bypass Mode Diagram

3.2.5 ECO Mode

The ECO Mode is enabled through the setting menu in LCD panel. In ECO mode, the load is powered by bypass when the bypass voltage and frequency are within the acceptable ranges. If the bypass is out of range, the UPS will transfer the power source of load from bypass to inverter. To shorten the transfer time, the rectifier and inverter will be in working condition only when the UPS is in ECO mode.

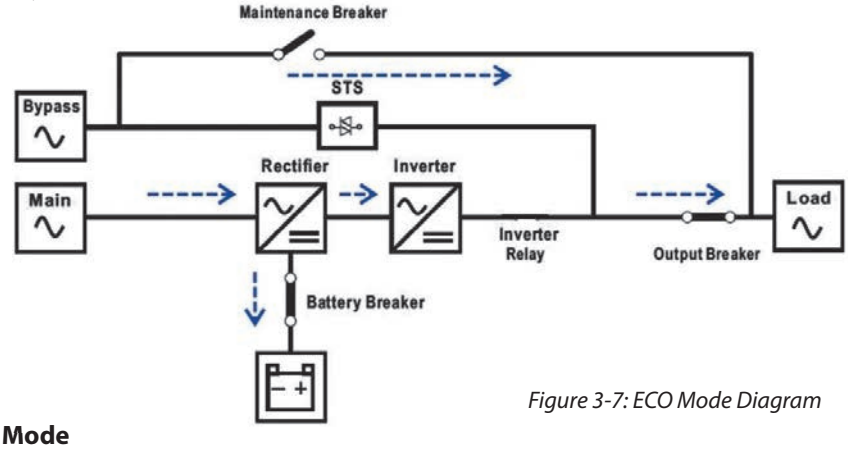

Figure 3-7: ECO Mode Diagram

3.2.6 Shutdown Mode

When the UPS is off state and the utility power source is absent, the UPS will enter shutdown mode.
Or when the UPS has discharged the battery to the cut-off level, the UPS will enter shutdown mode as well.
When the UPS enters this mode, it is going to shut off the control power of UPS. The rectifier, charger and inverter are all in off state.

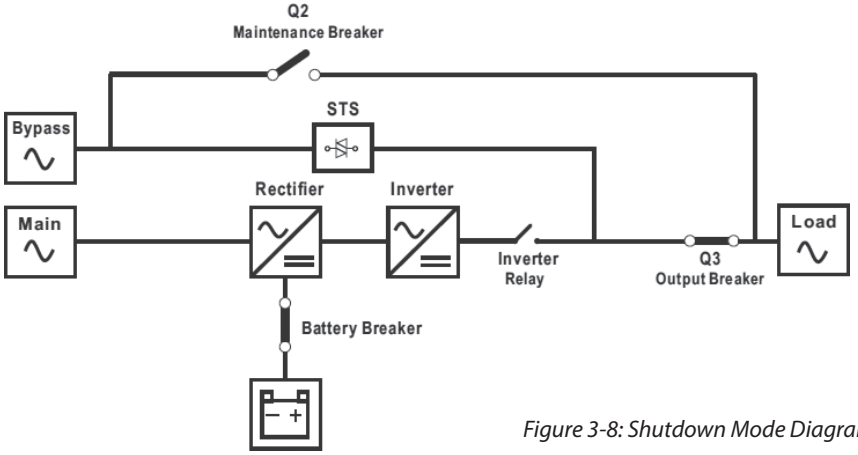

Figure 3-8: Shutdown Mode Diagram

3. Operation Mode and UPS Operation

3.2.7 Maintenance bypass Modee

A manual bypass switch is available to ensure continuity of supply to the critical load when the UPS becomes unavailable e.g. during a maintenance process. Before entering maintenance bypass mode, make sure the bypass power source is normal.

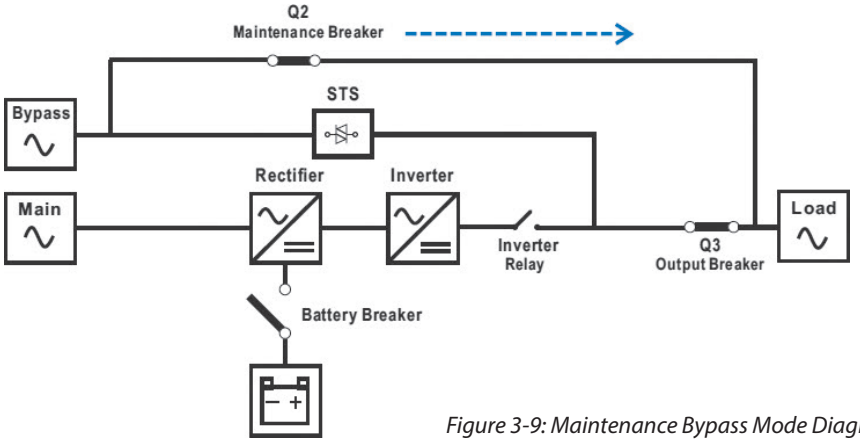

Figure 3-9: Maintenance Bypass Mode Diagram

3.3 UPS Operation

- Please confirm that the firmware version of the module and cabinet are compatible. If not, please update the firmware. For more information, please contact service personnel.
- Do not start UPS until the installation is completed.
- Make sure the wiring is correct, and the power cables are fixed firmly.
- Make sure the Power Modules' address is configured correctly. Refer to section 2.9.2 Power Module
- Make sure the ready switch on the Power Module has been switched to the "Locked" position.
- Make sure all the breakers are switch OFF.

3.3.1 AC Startup

Ensure to follow this procedure when turning on the UPS from a fully powered-down condition.
The operating procedures are as follows:

Step 1: Refer to "Chapter 2 Installation" to connect the power cables & install the Power Modules and the batteries required for the UPS system.

Step 2: Switch ON the battery breaker.

Step 3: Switch ON the external power switch in distribution panel to power the UPS. The STS module starts running and the LCD panel is displayed.

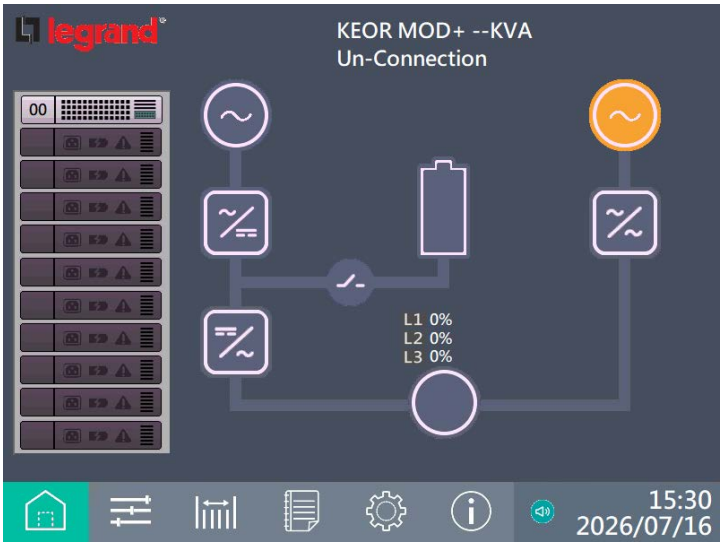

Step 4: Switch ON the input switch. The UPS will enter Standby Mode, if the setting of Bypass mode is disabled.

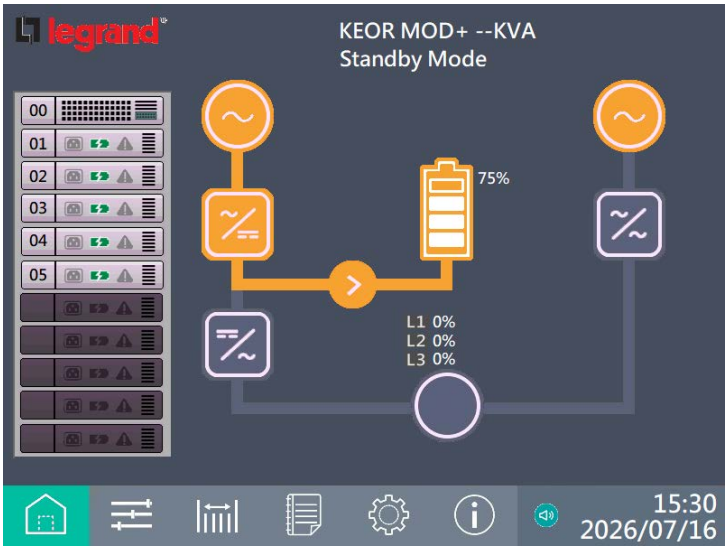

Or the UPS will enter Bypass Mode, if the setting of Bypass mode is enabled.

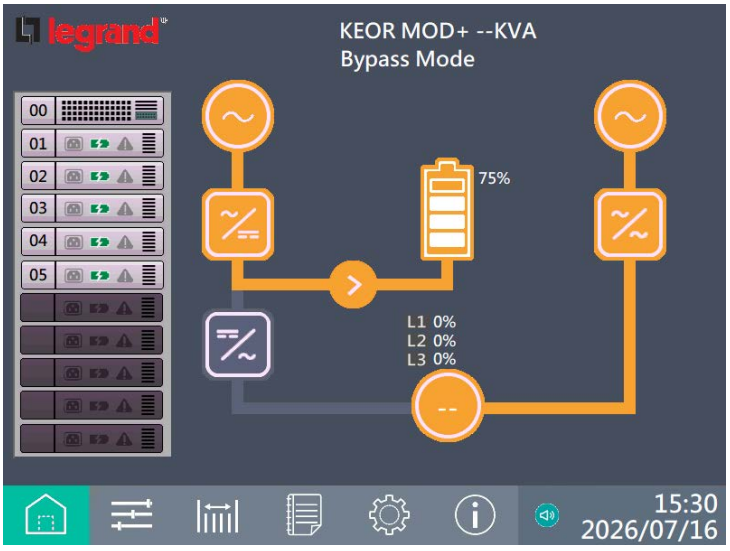

Step 5: Make sure that no warning or fault event occurs. If yes, please refer to Chapter 6 Troubleshooting to solve it.

Step 6: Choose "CONTROL" and click "system turn on" to enter Line Mode as shown below..

3. Operation Mode and UPS Operation

After turning on, UPS will do a self-test and start up inverter. UPS will be transferred to Line mode when all power modules are ready.

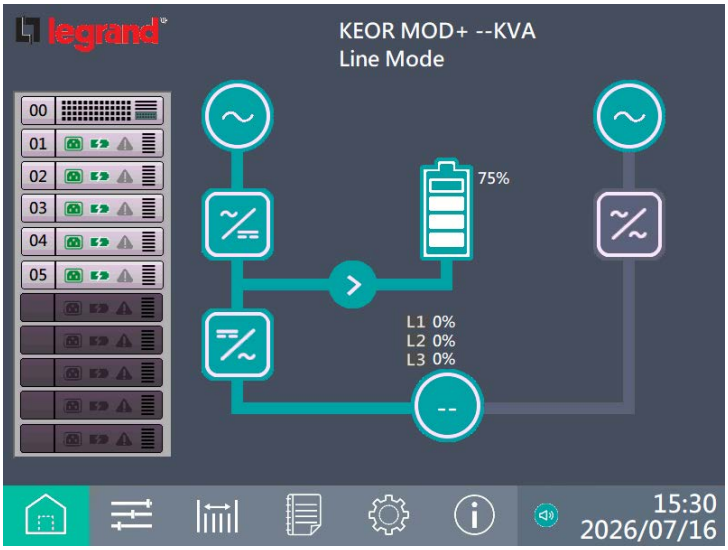

Step 7: Switch ON the output switch. AC startup procedure is complete.

3.3.2 Cold Start Startup

Step 1: Switch ON the battery Breaker.

Step 2: Press the "Battery Start" button on any one of Power Modules to start up the control power of all Power modules and STS module as shown below.

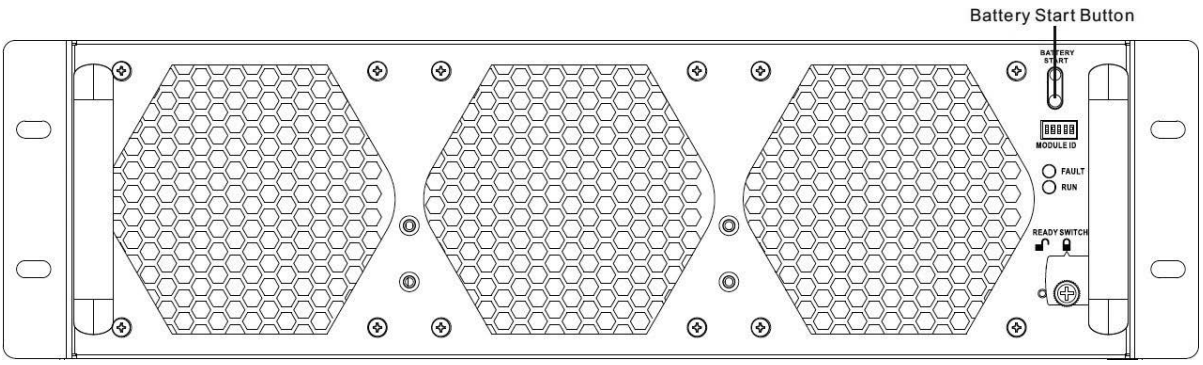

UPS KEOR MOD+ 420 - 600 kW Modular UPS (60 kW Power Module)

Step 3: After pressing the "Battery Start" button, UPS will enter Standby mode. Refer to the diagram below for LCD display.

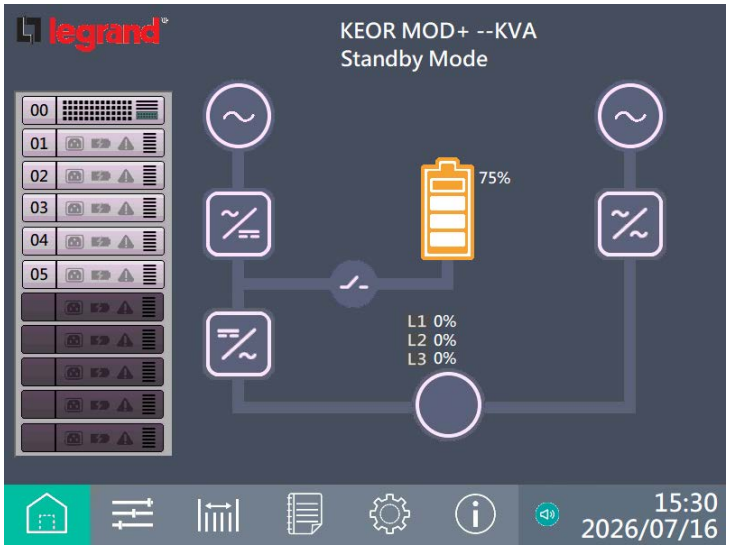

Step 4: Before UPS enters shutdown mode, choose "CONTROL" and clip "system turn on" to enter into Line Mode as shown below.

Step 5: Then, UPS will enter Battery Mode as shown in the diagram below.

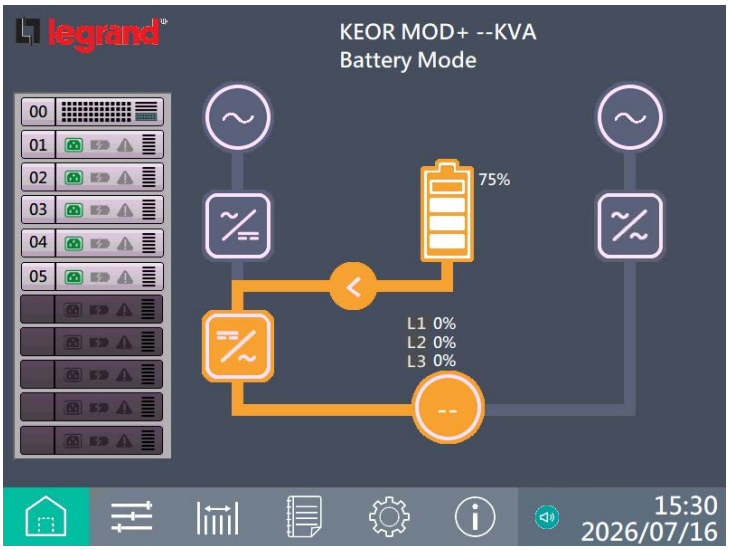

Step 6: Switch ON the output switch. Cold start startup procedure is complete.

3. Operation Mode and UPS Operation

3.3.3 Maintenance Bypass Operation

Follow the instructions to transfer to Maintenance Bypass and UPS protection as below.

3.3.3.1 Transfer to maintenance bypass

Step	420 KVA	600 KVA
1	Remove the mechanical lock plate of Maintenance Bypass Breaker.	Remove the mechanical lock plate of Maintenance Bypass Switch.
	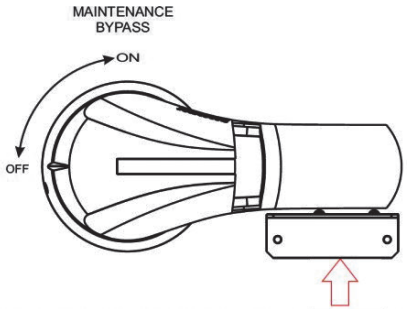	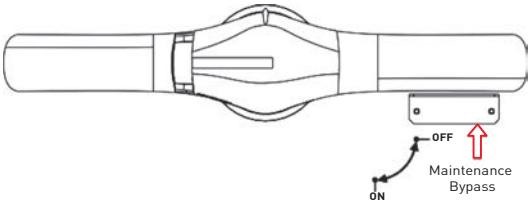
2	Make sure the UPS operates in Bypass mode as shown below.	Make sure the UPS operates in Bypass mode as shown below.
	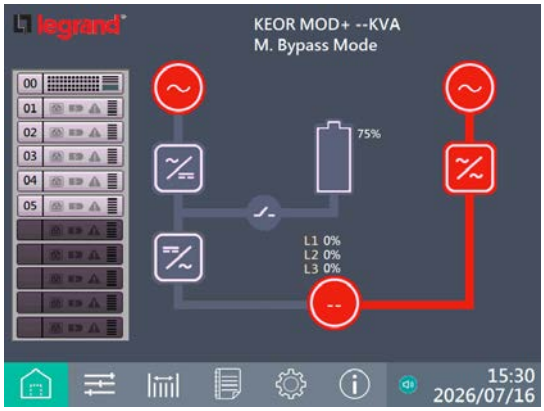	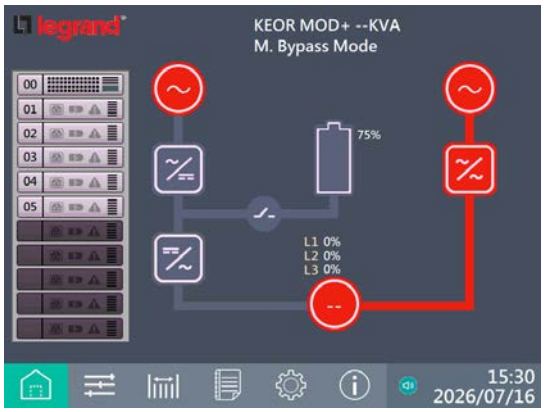
3	Switch ON the Maintenance Bypass Breaker as shown below.	Switch ON the Maintenance Bypass Switch as shown below
	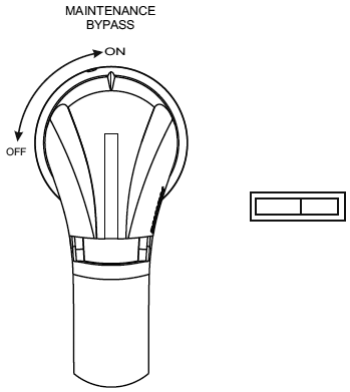	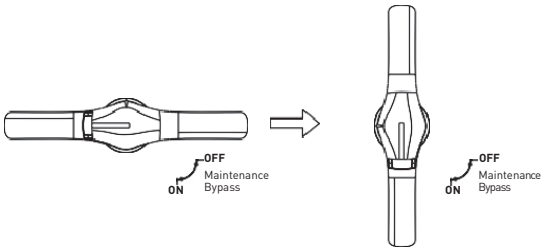
4	It is possible to change the STS module and Power Module in this mode.	It is possible to change the STS module and Power Module in this mode.

3.3.3.2 Transfer to UPS Protection

Step	420 KVA	600 KVA
1	Make sure the maintenance is complete. The Power Modules and STS module have been installed well.	Make sure the maintenance is complete. The Power Modules and STS module have been installed well.
2	Please enter LCD SETUP MENU and choose "SYSTEM" to ensure that the "Bypass mode" is enabled. If the "Bypass mode" is disabled, you must set it as "enabled". Then, exit the SETUP menu and check if the UPS operates in bypass mode.	Please enter LCD SETUP MENU and choose "SYSTEM" to ensure that the "Bypass mode" is enabled. If the "Bypass mode" is disabled, you must set it as "enabled". Then, exit the SETUP menu and check if the UPS operates in bypass mode.
	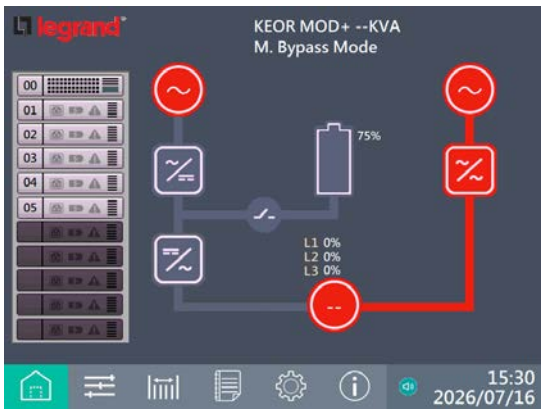	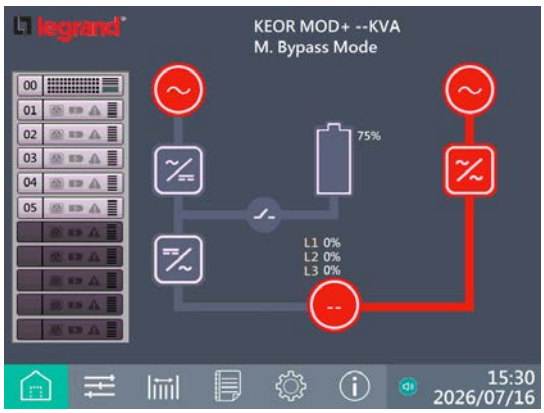
3	Turn off Maintenance Bypass Breaker as shown below.	Switch the handle toward downside as shown below.
	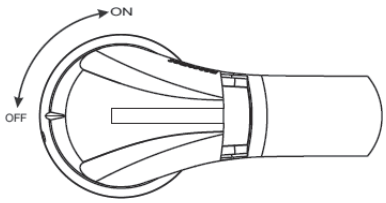	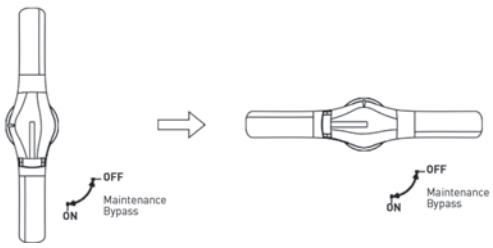
4	Lock back the mechanical lock plate as shown below.	Lock back the mechanical lock plate as shown below.
	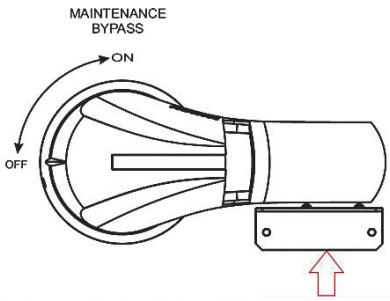	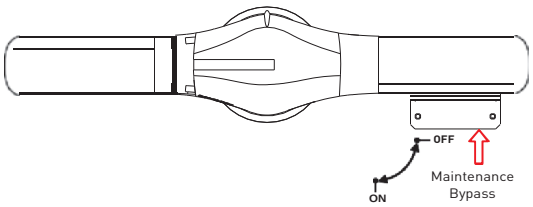

3. Operation Mode and UPS Operation

3.3.4 Turn off Operation

3.3.4.1 Turn Off Operation in Bypass Mode/ Standby Mode

When the UPS is neither turned on nor turned off, the UPS operates in the Standby Mode or Bypass Mode. It depends on the "Bypass Mode" Setting.
The LCD diagrams are shown below.

Bypass Mode Setting is Disabled

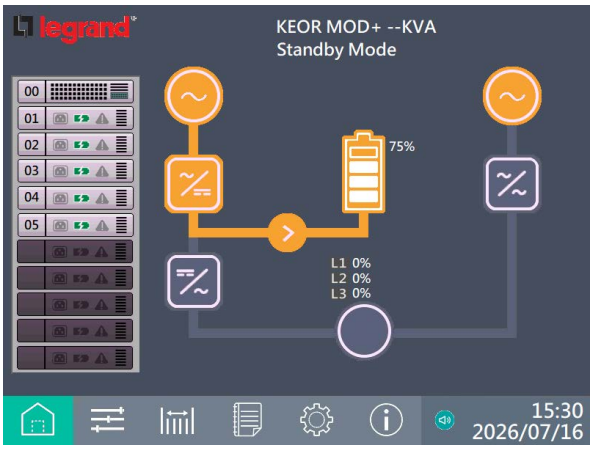

Bypass Mode Setting is Enabled

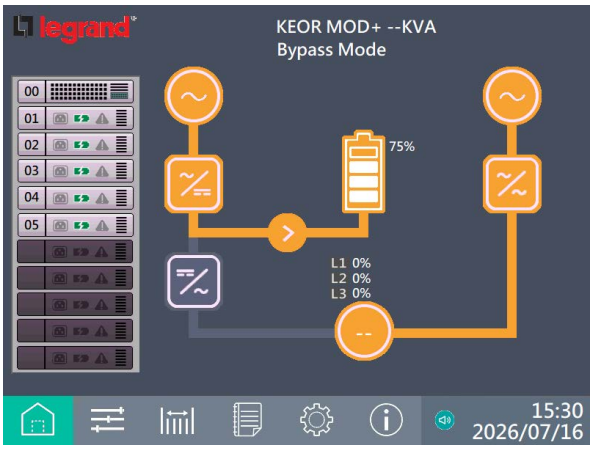

Step 1: Switch OFF the Main Breaker.
The LCD diagrams are shown below.

Bypass Mode Setting is Disabled

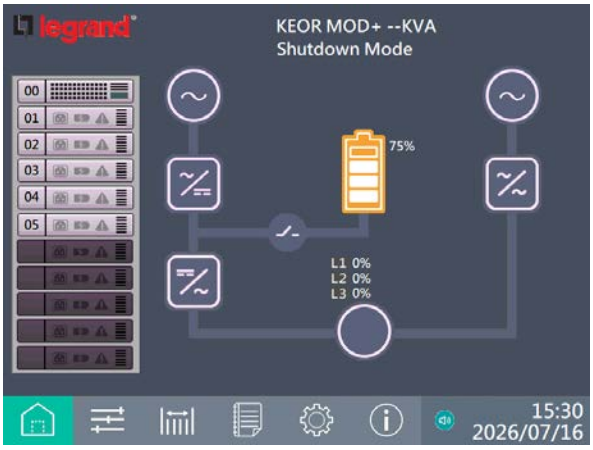

UPS enters Shutdown Mode.

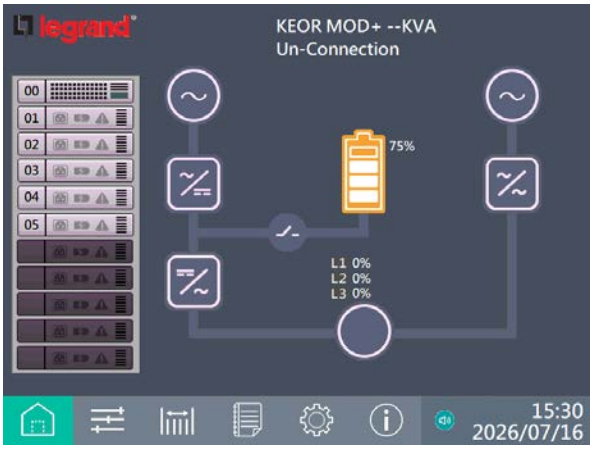

It is normal the Un-Connection is shown when Power Modules have shut off their control power.

Step 2: Switch OFF the external power switch to disconnect the AC power to the UPS. Wait until the LCD is OFF.

Step 3: Switch OFF the battery breaker if the UPS disconnects from AC power for a long time.

Bypass Mode Setting is Enabled

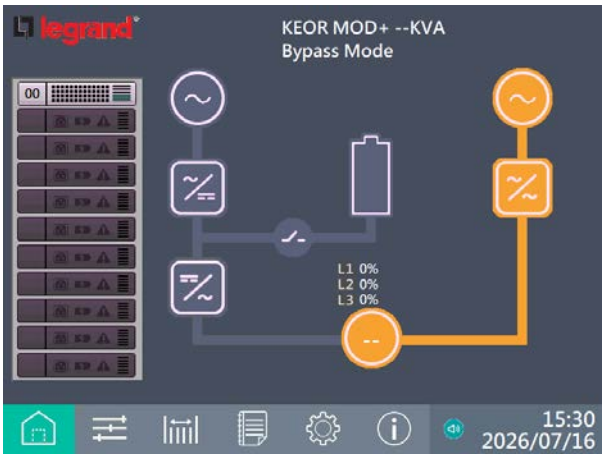

UPS stay in Bypass mode and No AC input is indicated.

3.3.4.2 Turn Off Operation in Line Mode

The LCD diagrams are shown below when the UPS operates in Line Mode.

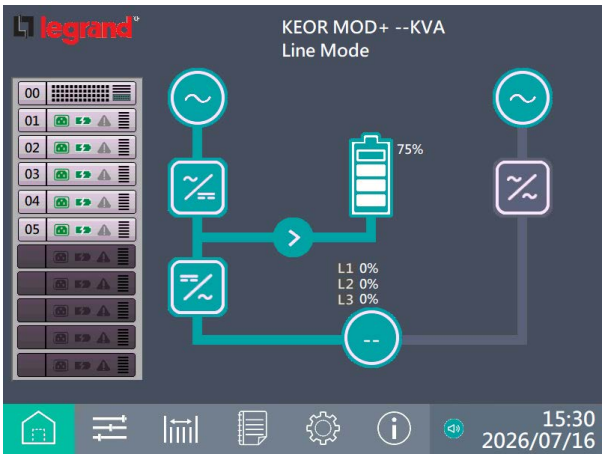

Step 1: Choose "CONTROL" and click "system turn off" to turn off the UPS.

After turning off, the UPS will transfer to Standby Mode or Bypass Mode depending on the "Bypass Mode" Setting. Next, follow the **Turn Off Operation in Bypass Mode/ Standby Mode** procedure.

3. Operation Mode and UPS Operation

3.3.4.3 Turn Off Operation in Battery Mode

The LCD screen is shown below when the UPS operates in the Battery Mode.

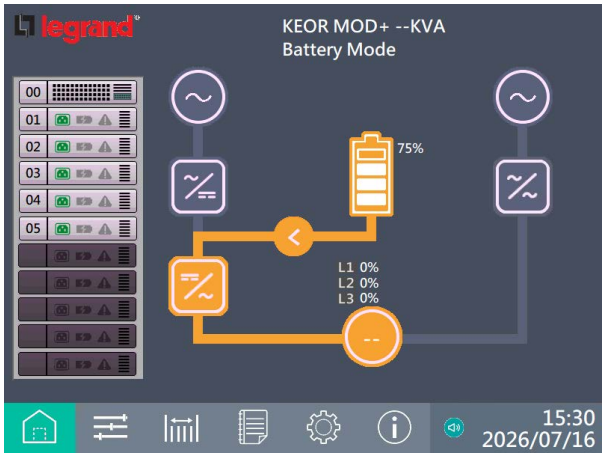

Step 1: Choose "CONTROL" and click "system turn off" to turn off the UPS.

After turning off, the UPS will transfer to Standby Mode.
Next, follow the **Turn Off Operation in Bypass Mode/ Standby Mode** procedure.

4. Control Panel and Display Description

4.1 Introduction

This control panel and display description are located on the front door of the UPS cabinet. It is USER control, monitoring of all measured parameters, UPS and battery status and alarms. The control panel is divided into four functional areas: **(1)** LCD display, **(2)** LED indications, **(3)** EPO key, **(4)** Audio Alarm, as shown in Figure 4-1.

1) LCD display: Graphic display for real-time UPS status and all measured parameters.
2) LED Bar indications. Refer to **TABLE 4-1**.
3) EPO key.
4) Audible Alarm. Refer to **TABLE 4-2**.

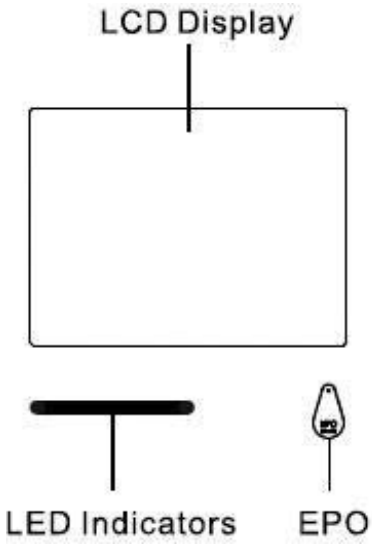

Figure 4-1

TABLE 4-1

LED Bar indications

Color		Definition
Green		Normal.
Orange		UPS alarm / Bypass mode / Self-loading mode.
Red		UPS fault.

TABLE 4-2

Audible Alarm

Audio Type	Description
Power on/off	Buzzer sounds 2 seconds.
Battery mode	Buzzer sounds every 2 seconds.
Low battery	Buzzer sounds every half seconds.
UPS alarm	Buzzer sounds every 1 second.
UPS fault	Buzzer continuously sounds.

Panel and Display are powered by bypass or battery.

4. Control Panel and Display Description

4.2 Screen Description

4.2.1 Start Screen

Upon starting, UPS executes self-test. The initial screen displays and remains still for approximately 5 seconds as shown in Figure 4-2

Figure 4-2 Initial screen

4.2.2 Main Screen

After initialization, the main screen will display Figure 4-3. Main screen is divided into six parts.

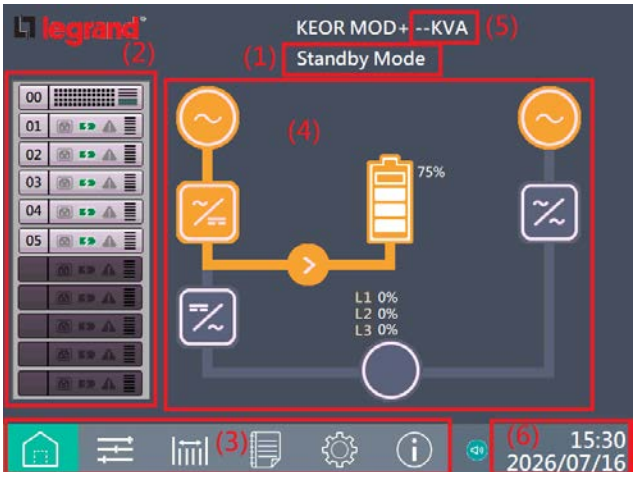

Figure 4-3 Main screen

1) **UPS Mode: Current operation mode.**
2) **Module Status**: It will show active module no. Touch each module icon to enter measurement screen The meanings of each icon are listed as below.

Module icon	Explanation
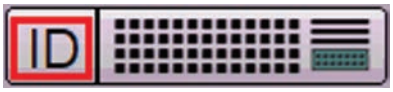	STS icon with ID no.
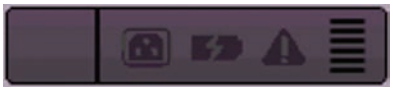	No power module
	Power module output off
	Power module charger off
	Power module is unlocked

Module icon	Explanation
	Power module icon with ID no.
	Power module output on
	Power module charger on
	Power module fault

3) Main Menu: Touch icon to enter sub screen.

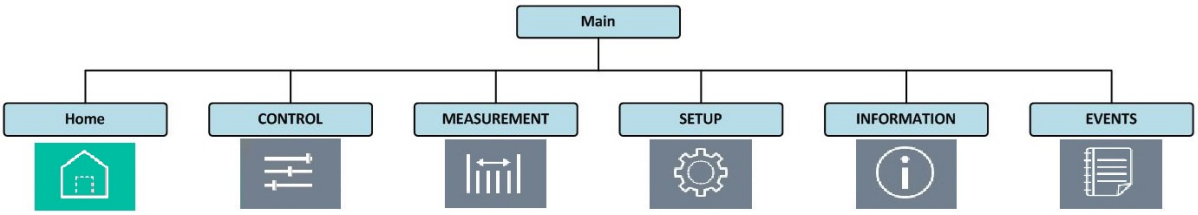

Figure 4-4 Menu tree

4) UPS Flow Chart: Current flow chart and measurement data.
5) UPS power rating.
6) Date and Time.

4.2.3 Control Screen

Touch icon to enter the sub-menu as shown in Figure 4-5 and 4-6.

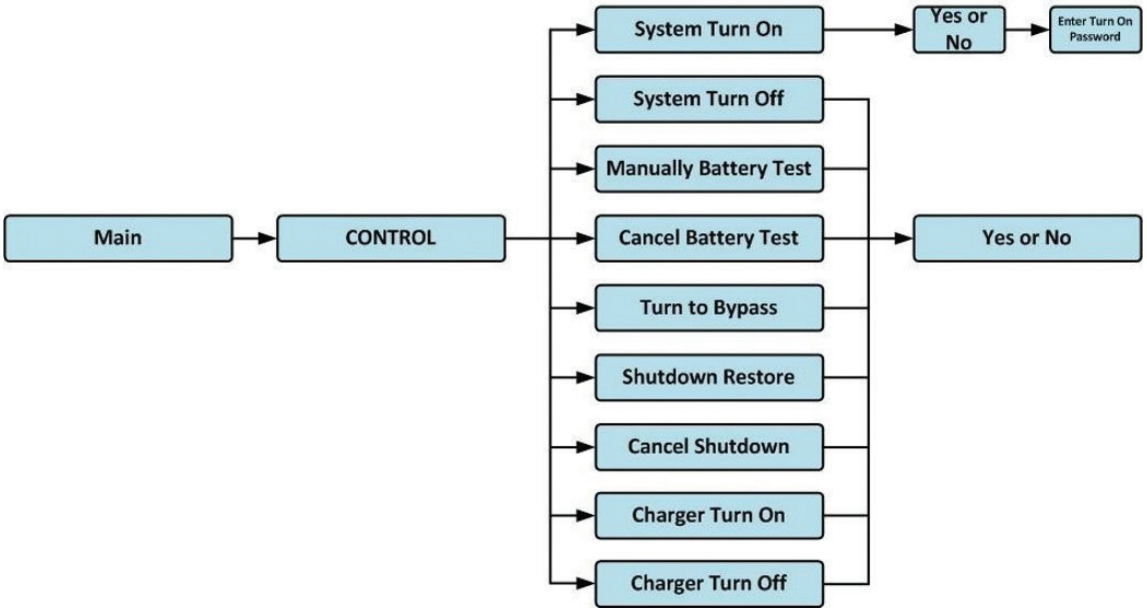

Figure 4-5 Control menu tree

Figure 4-6 Control screen page

4. Control Panel and Display Description

Touch any control option directly. Then, the confirmation screen will pop up. Touch YES icon to confirm command or touch NO icon to cancel command as shown in Figure 4-7.

Figure 4-7 Confirmation screen

4.2.4 Measurement Screen

Touch icon to enter the sub-menu. There are two sub-menus, system measurement and module measurement. Touch SYSTEM icon to monitor system measurement value or MODULE icon to monitor module measurement value. You may choose Input, Output, Bypass, Load or Battery to monitor detailed status under "System" or "Module" directory. Please refer to all screens in Figure 4-8 and 4-9. All detailed measurement items are listed in Table 4-4.

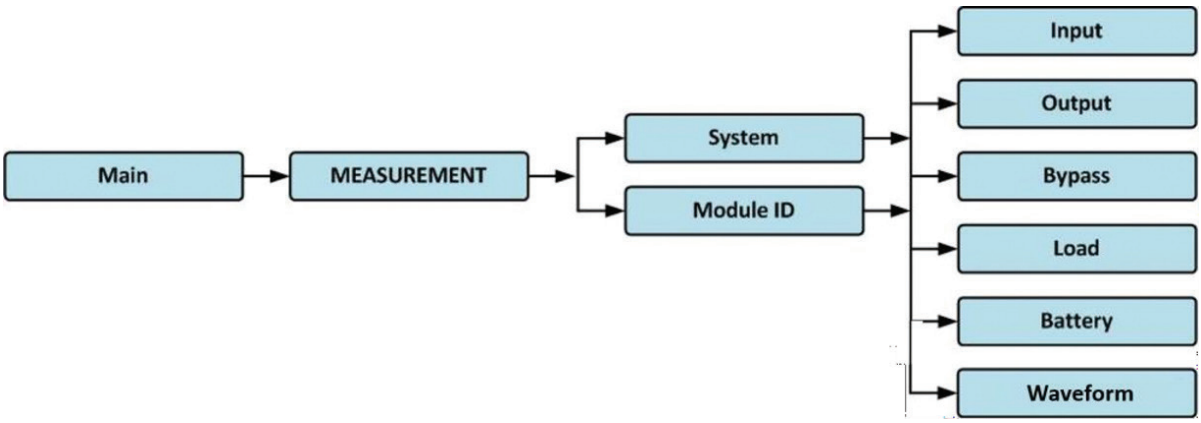

Figure 4-8 Measurement menu

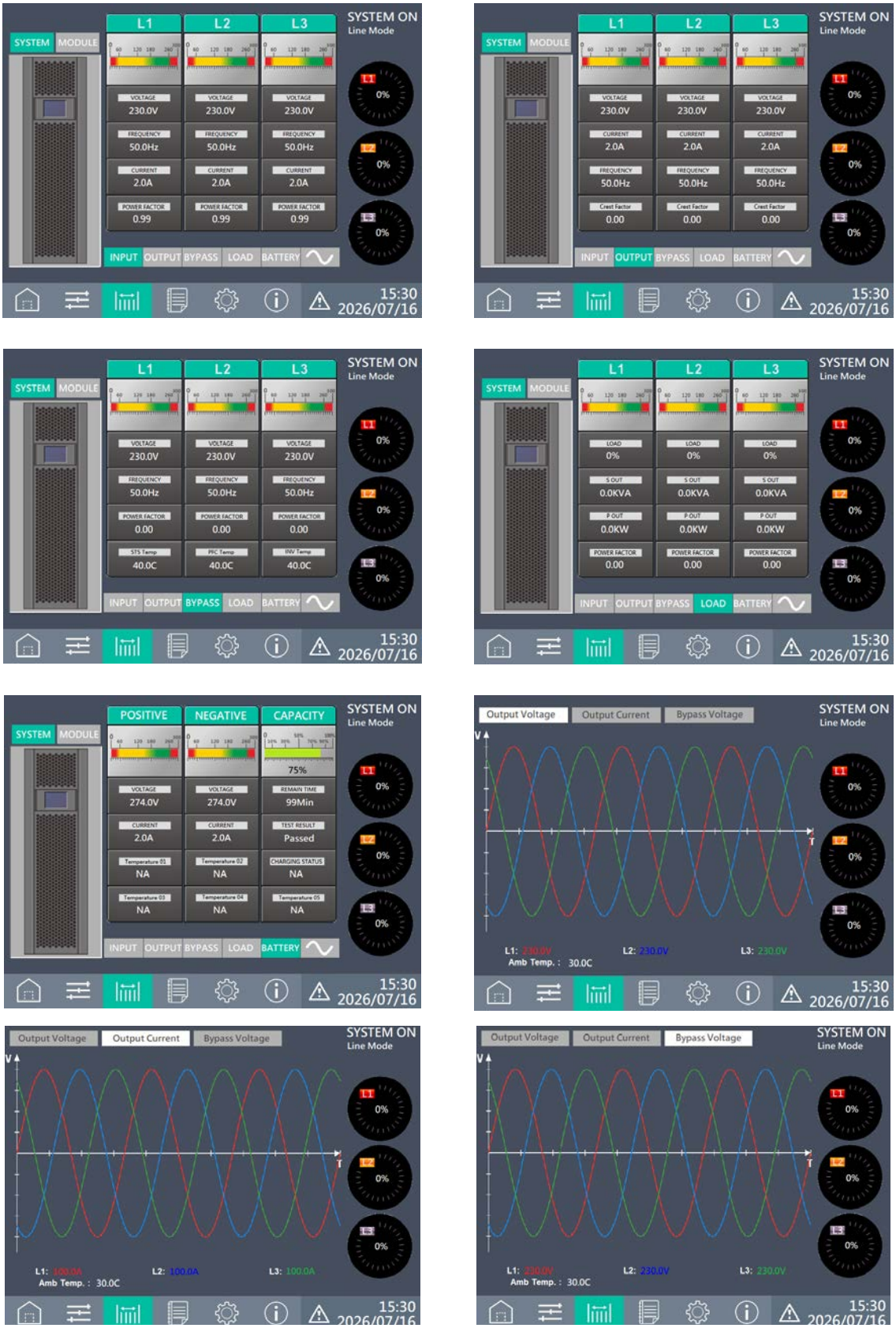

Figure 4-9 System Measurement Screens

4. Control Panel and Display Description

Touch MODULE icon to monitor module measurement value.

Figure 4-10 Module Measurement Screens

The measurement can be read as listed in Table 4-4.

TABLE 4-4

Measurement data

Menu	Item	Explanation
Input	L-N Voltage (V)	Input phase voltage (L1, L2, L3). Units 0.1V.
	L-N Current (A)	Input phase current (L1, L2, L3). Units 0.1A.
	Frequency (Hz)	Input Frequency (L1, L2, L3). Units 0.1Hz.
	Power Factor	Input Power Factor (L1, L2, L3)
Output	L-N Voltage (V)	Output phase current (L1, L2, L3). Units 0.1A.
	L-N Current (A)	Output phase current (L1, L2, L3). Units 0.1A.
	Frequency (Hz)	Output Frequency (L1, L2, L3). Units 0.1Hz.
	Crest Factor	Output Crest Factor (L1, L2, L3)
Bypass	L-N Voltage (V)	Bypass phase voltage (L1, L2, L3). Units 0.1V.
	Frequency (Hz)	Bypass Frequency (L1, L2, L3). Units 0.1Hz.
	Power Factor	Bypass Power Factor (L1, L2, L3)
	Temperature	STS Temp/ PFC Temp/ INV Temp
Load	Sout (KVA)	Apparent power. Units 0.1KVA.
	Pout (KW)	Active power. Units 0.1KW.
	Load Level (%)	The percentage of the UPS rating load. Units 1%.
	Power Factor	Output Power Factor (L1, L2, L3)
Battery	Positive Voltage (V)	Battery Positive Voltage. Units 0.1V.
	Negative Voltage (V)	Battery Negative Voltage. Units 0.1V.
	Positive Current (A)	Battery Positive Current. Units 0.1A.
	Negative Current (A)	Battery Negative Current. Units 0.1A.
	Remain Time (Sec)	Battery run time remaining. Units 1sec.
	Capacity (%)	The percentage of the capacity of the battery. Units 1%.
	Test Result	Battery test result
	Charging Status	Battery charging status
	Temperature 1 (°C)	Battery cabinet temperature of STS module. Units 0.1°C.
Waveform	Output Voltage	Output Voltage
	Output Current	Output Current
	Bypass Voltage	Bypass Voltage

4. Control Panel and Display Description

4.2.5 Setup Screen

Touch the icon to enter the sub-menu. It's required to enter password to access General, SYSTEM, BATTERY and PRE-ALARM sub-menus as shown in Figure 4-11 and 4-12.

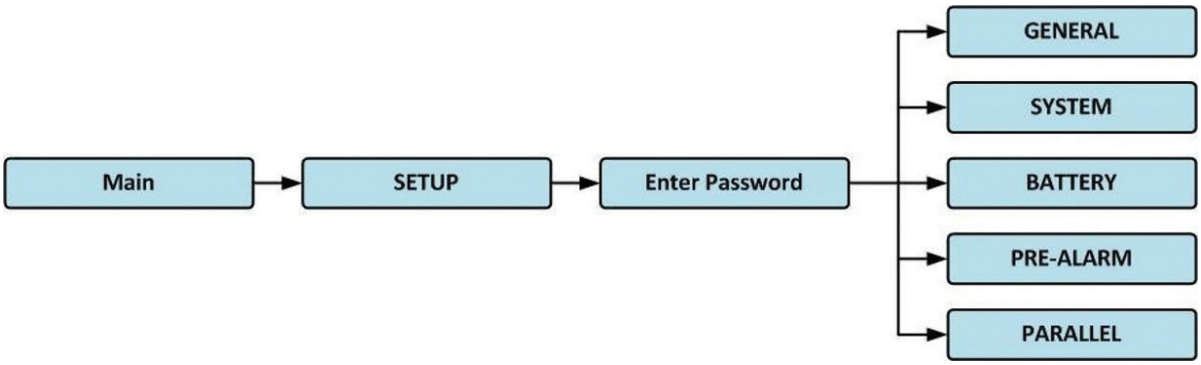

Figure 4-11 Setup menu

Touch the grey column and it will pop up number keyboard. Please enter 4-digit password and select icon to enter SETUP sub-menu. If an incorrect password is entered, the LCD screen will ask for retry.

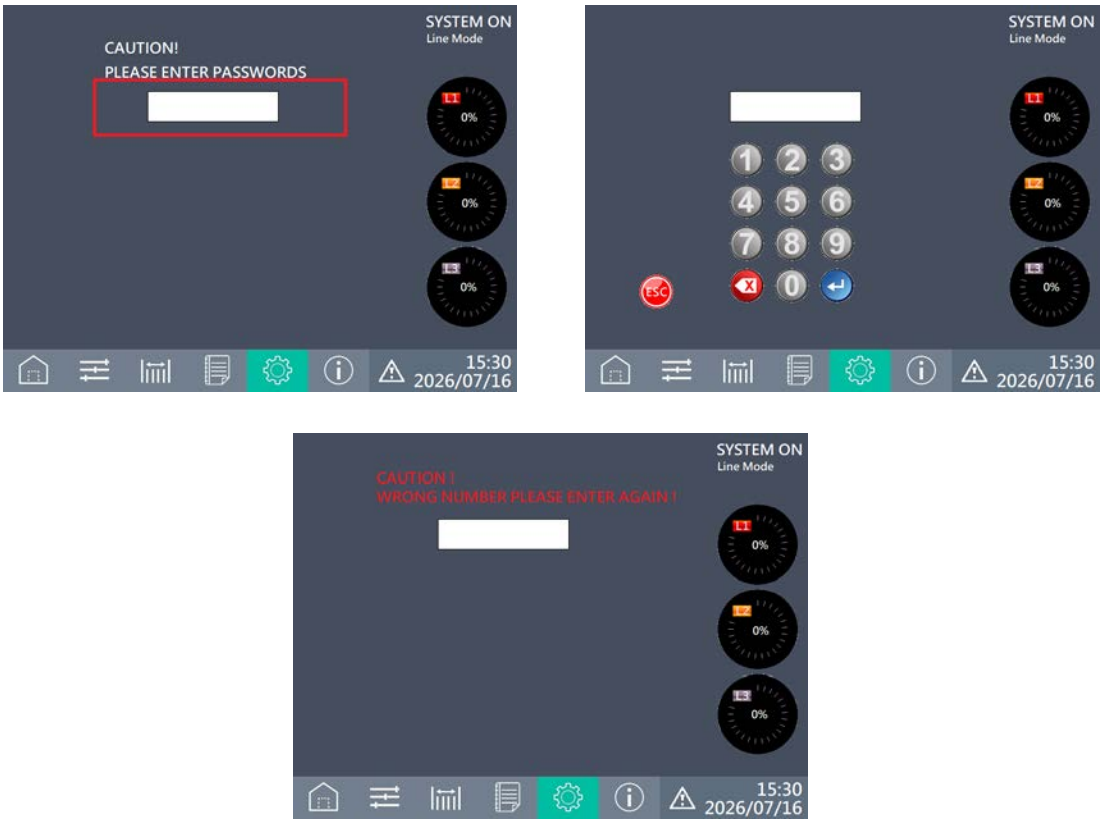

Figure 4-12 Enter password screen

UPS KEOR MOD+ 420 - 600 kW Modular UPS (60 kW Power Module)

There are two levels of password protection, User Password and Maintainer Password. The default password for user is "0000". It could be changed by user.
The Maintainer password is owned by service personnel.
Entering different levels of password can access different settings.
The setting can be changed in different operation mode. Table **4-5** lists the relevant information.

TABLE 4-5
All setting items in Setup Menu

Setting item	UPS operation Mode	Standby Mode	Bypass Mode	Line Mode	Battery Mode	Battery Test Mode	Fault Mode	Converter Mode	ECO Mode	Authorization	
										User	Maintainer
General	Model Name	Y	Y	Y	Y	Y	Y	Y	Y		Y
	Language	Y	Y	Y	Y	Y	Y	Y	Y	Y	Y
	TIME	Y	Y	Y	Y	Y	Y	Y	Y		Y
	Change Password	Y	Y	Y	Y	Y	Y	Y	Y	Y	Y
	Baud Rate	Y	Y	Y	Y	Y	Y	Y	Y	Y	Y
	Audible Alarm	Y	Y	Y	Y	Y	Y	Y	Y	Y	Y
	Factory Reset	Y									Y
	EPO Function	Y									Y
	EEPROM Reset	Y									Y
	Save Setting	Y	Y							Y	Y
	Startup Screen	Y	Y	Y	Y	Y	Y	Y	Y		Y
	Multi-Settings	Y	Y	Y	Y	Y	Y	Y	Y	Y	Y
System	Output Voltage	Y	Y								Y
	Bypass Voltage Range	Y	Y	Y	Y	Y	Y	Y	Y		Y
	Bypass Frequency Range	Y	Y								Y
	Converter Mode	Y									Y
	ECO Mode	Y	Y								Y
	Bypass mode	Y	Y								Y
	Auto-restart	Y	Y	Y	Y	Y	Y	Y	Y		Y
	Power walk in	Y	Y	Y	Y	Y	Y	Y	Y		Y
	Battery mode delay time	Y	Y	Y			Y	Y	Y		Y
	System shutdown time	Y	Y	Y	Y	Y	Y	Y	Y		Y
	System restore time	Y	Y	Y	Y	Y	Y	Y	Y		Y
	Redundancy	Y	Y	Y	Y	Y	Y	Y	Y		Y
	Power rating setting	Y	Y	Y	Y	Y	Y	Y	Y		Y
Battery	Nominal battery voltage	Y	Y								Y
	Battery capacity in ah	Y	Y	Y			Y	Y	Y		Y
	Maximum charging current	Y	Y								Y
	Battery Low/Shutdown Setting	Y	Y	Y			Y	Y	Y		Y
	Periodic Battery Test	Y	Y	Y	Y	Y	Y	Y	Y		Y
	Battery Test Interval	Y	Y	Y	Y	Y	Y	Y	Y		Y
	Stop by Time	Y	Y	Y	Y		Y	Y	Y		Y
	Stop by Battery Voltage	Y	Y	Y	Y		Y	Y	Y		Y
	Stop by Battery Capacity	Y	Y	Y	Y		Y	Y	Y		Y
	Battery Age Alert	Y	Y	Y	Y	Y	Y	Y	Y		Y
	Temperature Compensation	Y	Y	Y	Y	Y	Y	Y	Y		Y
	Charging Voltage	Y	Y								Y
Pre-Alarm	Line Voltage Range	Y	Y	Y	Y	Y	Y	Y	Y		Y
	Line Frequency Range	Y	Y	Y	Y	Y	Y	Y	Y		Y
	Overload	Y	Y	Y	Y	Y	Y	Y	Y		Y
	Load Unbalance	Y	Y	Y	Y	Y	Y	Y	Y		Y
Others	Dynamic Password	Y	Y	Y	Y	Y	Y	Y	Y		Y
	Customer ID	Y	Y	Y	Y	Y	Y	Y	Y		Y
	ISO Function	Y	Y				Y		Y		Y
	Generator Input	Y	Y	Y	Y	Y	Y	Y	Y		Y
	Sleep Function	Y	Y	Y	Y	Y	Y	Y	Y		Y
	Neg. Power Repression	Y	Y	Y	Y	Y	Y	Y	Y		Y
	LBS	Y									Y
	Self-Test	Y	Y			Y					Y
	Independent Battery	Y	Y								Y

"Y" means that this setting item can be set in this operation mode.

4. Control Panel and Display Description

Setting Procedure

Step 1: Choose the setting item from GENERAL, SYSTEM, BATTERY and PRE-ALARM.
Step 2: Select modified item and it will show current value and setting in the screen. Simply choose the current setting and it will list all alternatives. Please choose the modified setting.
Step 3: Choose icon to confirm the setting change or choose icon to cancel the setting.
Step 4: **After finishing the setting, please save the setting in GENERAL screen.**

Figure 4-13 Setting procedure

4.2.6.1 Setup-General Screen

The Setup-General screen and setting list are shown in Figure 4-14 and Table 4-6. General setting can be set in any operating mode.

Figure 4-14 Setup-General screen

TABLE 4-6
Setup-General setting list

Setting Item	Sub Item	Explanation
Model Name		Set UPS Name (xxxxxxxxxx). The max. length is 10 characters.
Language	--	Provides 3 optional LCD languages: • English (Default) • Simplified Chinese
TIME	Adjust Time	Set current date and time. (yyyy / mm / dd hour: min: sec) **MUST be set after UPS installation**
	System Installed Date	Set system installed date (yyyy / mm / dd) 2015/1/1 (Default) **MUST be set after UPS installation**
	System Last Maintain Date	Set system latest maintenance date (yyyy / mm / dd) **MUST be set after UPS installation**
	Battery Installed Date	Set battery installed date (yyyy / mm / dd) **MUST be set after UPS installation**
	Battery Last Maintain Date	Set battery latest maintenance date (yyyy / mm / dd) **MUST be set after UPS installation**
Baud Rate	--	Set COM Port0 Baud Rate • 2400 (Default) • 4800 • 9600 Set COM Port1 Baud Rate • 2400 (Default) • 4800 • 9600
Audible Alarm	--	Set Audible Alarm • Disable • Enable (Default)
Factory Reset	--	Restore to factory default setting Refer to **Table 4-7**
EPO Function		Set EPO function • Normally open • Normally close
EEPROM Reset	--	Set EEPROM default Refer to **Table 4-7**
Password	--	Set New Password. 0000 (Default)
Save Setting	--	Save EEPROM **Use this feature to save the setting(s) you have done.**
Startup screen	Text	Set Startup Text (xxxxxxxxxxxx). The max. length is 12 characters.
	Logo Code	Set Logo 0 (Default)
Multi-Setting	Backlight Wakeup	Set Backlight Wakeup • Disable (Default) • Enable

4. Control Panel and Display Description

TABLE 4-7
EEPROM Reset Category list

Setting Item		Factory Reset	EEPROM Reset
General	Model Name	Y	Y
	Language	Y	Y
	Adjust Time	Y	Y
	System Installed Date	Y	Y
	System Last Maintain Date	Y	Y
	Battery Installed Date	Y	Y
	Battery Last Maintain Date	Y	Y
	Change Password	Y	Y
	Baud Rate	Y	Y
	Audible Alarm	Y	Y
	Factory Reset	--	--
	EEPROM Reset	--	--
	EPO Function	Y	Y
	Save Setting	Y	Y
	Startup screen		
	Multi-Setting	Y	Y
System	Output Voltage	Y	Y
	Bypass Voltage Range	Y	Y
	Bypass Frequency Range	Y	Y
	Converter Mode	Y	Y
	ECO Mode	Y	Y
	Bypass Mode	Y	Y
	Auto-Restart	Y	Y
	Battery Mode Delay Time	Y	Y
	System Shutdown Time	Y	Y
	System Restore Time	Y	Y
	Redundancy	Y	Y
	Power Rating Setting	Y	Y
	Charger Test	--	--
	Calibration Data		Y

Setting Item		Factory Reset	EEPROM Reset
Battery	Nominal Battery Voltage	Y	Y
	Battery Capacity in Ah	Y	Y
	Maximum Charging Current	Y	Y
	Battery Low/Shutdown Setting	Y	Y
	Periodic Battery Test	Y	Y
	Battery Test Interval	Y	Y
	Stop by Time	Y	Y
	Stop by Battery Voltage	Y	Y
	Stop by Battery Capacity	Y	Y
	Battery Age Alert	Y	Y
	Temperature Compensation	Y	Y
	Charging Voltage	Y	Y
	Auto-Restart Battery Voltage	Y	Y
Pre-Alarm		-	Y
Others	LBS	Y	Y
	Self-Test	Y	Y
	ISO Function	Y	Y
	Generator Input	Y	Y
	Independent Battery	Y	Y
	Neg. Power Repression	Y	Y
	Sleep Function	Y	Y

4.2.6.2 Set-up-System Screen

The Setup-System screen and setting list as shown in Figure 4-15 and table 4-8. System settings can be set only when UPS is operated in certain mode. Please check setting item availability table 4-5 for the details. If it's not set up under specific mode, the warning screen will appear. Refer to figure 4-16.

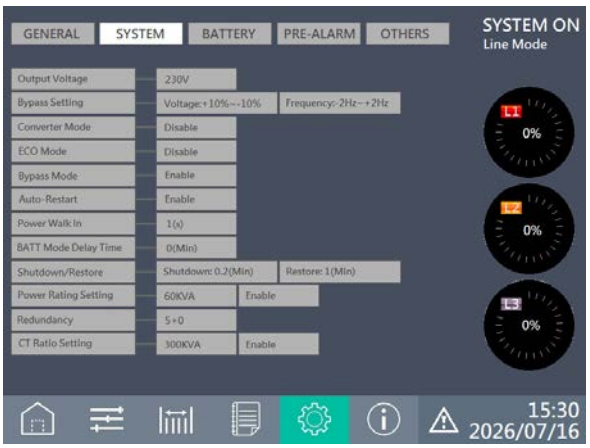

Figure 4-15 Setup-System screen

Figure 4-16 Warning screen

Setup-System setting list is shown in Table 4-8.

4. Control Panel and Display Description

TABLE 4-8
Setup-System setting list

Setting Item	Sub Item	Explanation
Output Voltage	--	Set output voltage • 210 Vac ~ 250 Vac (230 Vac Default) MUST be reviewed after UPS installation
Bypass setting	Bypass Voltage Range	Set bypass voltage range: Upper limit • +10% • +15% • +20% (Default) Lower limit • -10% • -20% • -30% (Default)
	Bypass Frequency Range	Set bypass Frequency range: Upper/ Lower limit • +/- 1Hz • +/- 2Hz • +/- 4Hz (Default)
Converter Mode	--	Set converter mode • Disable (Default) • Enable • 50Hz • 60Hz • AUTO
ECO Mode	--	Set ECO mode • Disable (Default) • Enable
Bypass Mode	--	Set bypass mode • Disable • Enable (Default) MUST be reviewed after UPS installation. If you need the Bypass power when UPS is OFF, please enable it.
Auto-Restart	--	Set auto-restart • Disable • Enable (Default) After "Enable" is set, once UPS shutdown occurs due to low battery and then utility restores, the UPS will return to line mode.
Power Walk in		Set power walk in upper/lower limits • +/- 1s time step (setting range: 1s ~ 60s)
Battery Mode Delay Time	--	Set system shutdown delay time in battery mode (0~990min). • 0: Disable (Default) • Not 0: Enable When this feature is enabled, UPS will shut off output after UPS operates in Battery mode for certain minute.

Setting Item	Sub Item	Explanation
Shutdown/ Restore	System Shutdown Time	Set system shutdown time (0.2~99min) • 0.2 min (Default) This delay time will start counting when the CONTROL-Shutdown Restore command is executed.
	System Restore Time	Set system restore time (0~9999min) • 1 min (Default) This delay time will start counting after shutdown time is elapsed when the CONTROL-Shutdown Restore command is executed.
Power rating setting	--	Set power rating value per module • 60KVA • Power Rating Display: Enable/Disable
Redundancy	--	Set total power and redundancy Redundancy: the QTY of redundant power module **MUST be set after UPS installation or the QTY of Power Module is changed**
CT ratio setting		Set the BYPASS CT ratio • 420KVA • 600KVA

4.2.6.3 Setup-Battery Screen

The Setup-Battery screen and setting list as shown in Figure 4-17 and table 4-9. Battery settings can be set only when UPS is operated in standby mode. If it's not in standby mode, the warning screen will appear as shown in Figure 4-16.

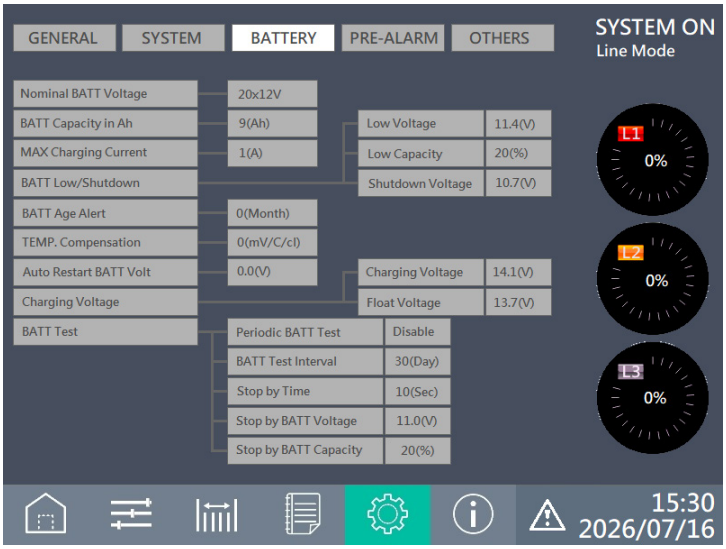

Figure 4-17 Setup-BatBattery Screen

Battery setting can be set only when UPS is operating in standby mode. If it's not in standby mode, the warning screen will appear as shown in Figure 4-23.
See Setup-Battery setting list in **Table 4-9**

4. Control Panel and Display Description

TABLE 4-9:
Setup-Battery setting list

Setting Item	Sub Item	Explanation
Nominal Battery Voltage	--	Set battery nominal voltage • 17x12V (Default) • 18x12V • 19x12V • 20x12V **MUST be set after UPS installation**
Battery	--	Set battery capacity. (0~999)
Capacity in Ah	• 9Ah (Default) **MUST be set up after UPS installation or Battery capacity is changed.**	
Maximum Charging Current	--	Set battery maximum charging current (1~128A) 10A (Default) **MUST be set up after UPS installation or Battery capacity is changed.**
Battery Low/ Shutdown Setting	Low Voltage	Set battery low voltage (10.5~11.5V) x(battery Number) 11.4 V x Battery Number (Default)
	Low Capacity	Set battery low capacity (20~50%) 20% (Default)
	Shutdown Voltage	Set battery voltage point for system shutdown in battery mode (10.0~11V) x (battery Number 10.7V x Battery Number (Default)
Battery Test	Periodic Battery Test	Set periodic battery test disable or enable • Disable (Default) • Enable
	Battery Test Interval	Set battery test interval (7~99 Days) 30 Days (Default)
	Stop by Time	Set testing time for battery test (10~1000sec) 10 sec (Default)
	Stop by Battery Voltage	Set stop battery voltage in battery test (11~12V) x (battery Number) 11V x Battery Number (Default)
	Stop by Battery Capacity	Set battery capacity to stop battery-testing. (20~50%) 20% (Default)
Battery Age Alert	Battery Age Alert (Months)	Set battery age for replacement. (Disable,12~60Months) • Disable (Default) If this feature is enabled and the battery has been installed over this period, there is a warning "Battery Age Alert" to indicate it.
Temperature Compensation	--	Set battery temperature compensation. (0~-5 (mV/C/cl)) 0 (mV/C/cl) (Default)
Auto Restart BATT Volt	--	Set battery auto restart voltage 0V (Default)
Charging Voltage	--	Set battery charging voltage. (13.6~14.4V) • 14.1V (Default) Set battery float voltage. (13.2~14.1V) 13.7V(Default)

4.2.6.4 Pre-Alarm Screen

The Setup-Pre-Alarm screen and setting list as shown in Figure 4-18 and table 4-10. Pre-Alarm setting can be set in any operation mode.

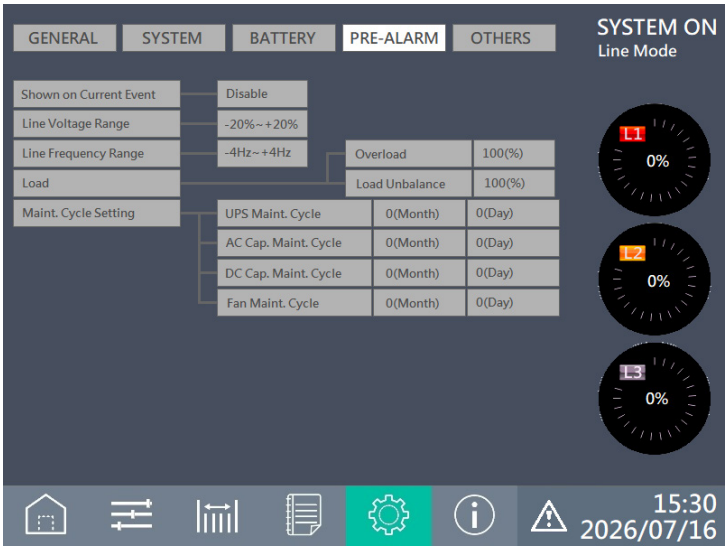

Figure 4-18 Setup-Pre-Alarm screen

Pre-Alarm setting can be set in any operation mode. See Setup-Pre-Alarm setting list in T**able 4-10.**

TABLE 4-10
Setup-Pre-Alarm setting list

Setting Item	Sub Item	Explanation
Shown on Current Event		Set Pre-Alarm Warning Shown on Current Event Page of LCD: • Enable • Disable (Default)
Line Voltage Range	--	Set line voltage range: Upper limit • +5% • +10% • +15% • +20% (Default) Lower limit • -5% • -10% • -15% • -20% (Default)
Line Frequency Range	--	Set line frequency range: Upper / Lower limit • +/- 1Hz • +/- 2Hz • +/- 3Hz • +/- 4Hz (Default)
Load	--	Set UPS Overload percentage (40~100%) • 100% (Default) Set UPS load unbalance percentage (20~100%) • 100% (Default)

4. Control Panel and Display Description

4.2.6.4 Setup-OTHERS Screen

Use UP and DOWN icons to switch different sub-menus. Press ENTER icon to go into the OTHERS setting screen, as shown in Figure 4-19.

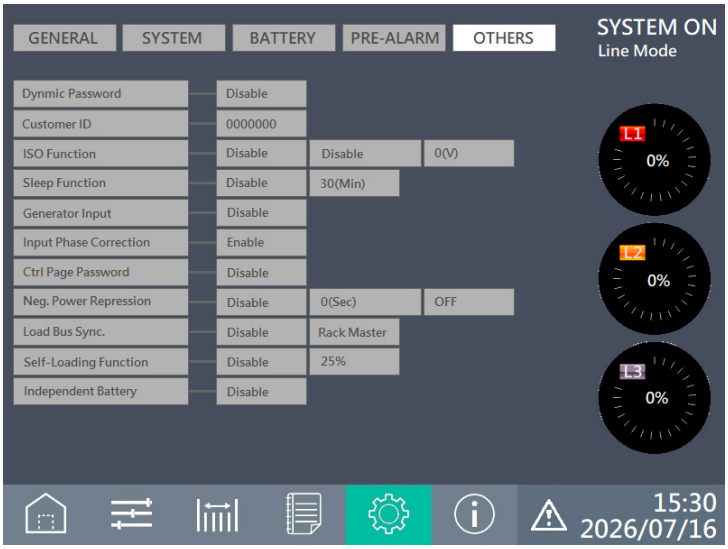

Figure 4-19 Setup-OTHERS screen

TABLE 4-11
Setup others setting list

Setting Item	Sub Item	Description
Dynamic Password	--	Set Dynamic Password function disable or enable • Disable (Default) • Enable
Customer ID	--	• The default customer code is "0000000"
ISO Function	ISO ON/OFF	Turn on or off voltage compensation • Disable (Default) • Enable
	Over TEMP. Signal	Transformer over-temperature detection • Disable (Default) • Normal OPEN • Normal CLOSE
	Vout compensation	Magnitude of voltage compensation • From -15 to 15 volt except 0 (Default 7)
Sleep Function	Sleep Function ON/OFF	Set Sleep function disable or enable • Disable (Default) • Enable
	Trigger Time	Setting Trigger Time • 10 minutes • 20 minutes • 30 minutes (Default)
Generator Input	--	Set Input Phase Correction function disable or enable • Disable (Default) • Enable
Input Phase Correction	--	Set Input Phase Correction function disable or enable • Disable (Default) • Enable
Ctrl Page Password	--	Set Ctrl Page Password function disable or enable • Disable (Default) • Enable

Setting Item	Sub Item	Description
Neg. Power Repression		Set Negative Power Repression Function ON/OFF and Maximum ON Time: • ON (When Maximum ON Time > 0sec) • OFF (Default) (When Maximum ON Time = 0sec) Set Negative Power Repression Function Pin Test: • ON • OFF (Default)
Load Bus Sync.	Load Bus Sync. ON/OFF	Set Load Bus Synchronization function disable or enable • Disable (Default) • Enable
	Rack	Set the rack as rack master or rack slave • Rack Master (Default) • Rack Slave (Rack Slave follows the sync signal of Rack Master.)
Self-Test	Self-Test ON/OFF	The input of the machine needs to be connected to the utility power and the output must be turned off. Set Self-Test function disable or enable • Disable (Default) • Enable
	Load Setting	Set the load for Self-Test • 25% • 50% • 75% • 100%
Independent Battery	-	Set independent battery function disable or enable - Disable (Default) - Enable

4.2.7 Information Screen

Touch icon to enter the sub-menu. In this Information screen, you can check the UPS configuration of the unit. There are three sub-menus, Identification, System and Battery.

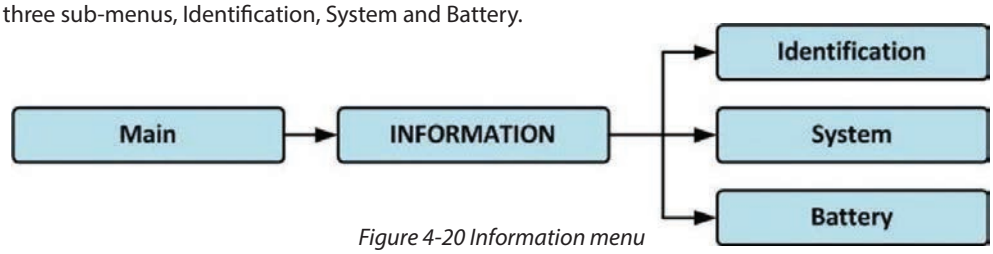

Figure 4-20 Information menu

4.2.7.1INFORMATION - Identification Screen

When Identification submenu is clicked, the Model Name, Serial No. and Firmware Version will be displayed, as shown in Figure 4-21.

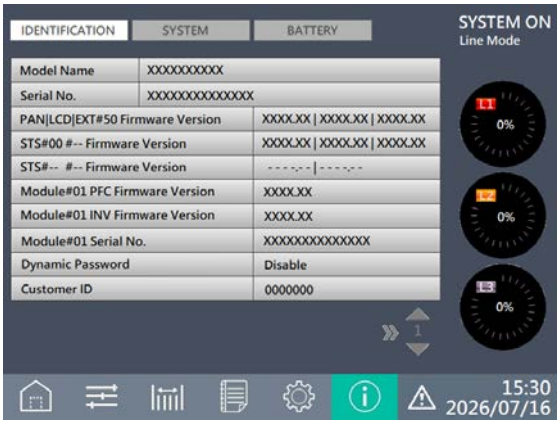

Figure 4-21 Identification screen page

4. Control Panel and Display Description

4.2.7.2 INFORMATION - System Screen

When System submenu tab is touched, the system power, nominal voltage, nominal frequency … etc. information will be displayed, as shown in Figure 4-22 to 4.24. Touch UP and DOWN arrows to switch different pages.

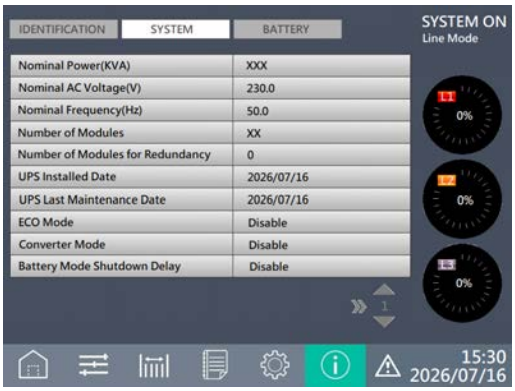

Figure 4-22 INFORMATION System screen page 1

Figure 4-23 INFORMATION System screen page 2

Figure 4-24 INFORMATION System screen page 3

4.2.7.2 INFORMATION - Battery Screen

When Battery submenu tab is touched, the Battery nominal voltage, capacity, charging current … etc. information will be displayed, as shown in Figure 4-25.

Figure 4-25 INFORMATION Battery screen page

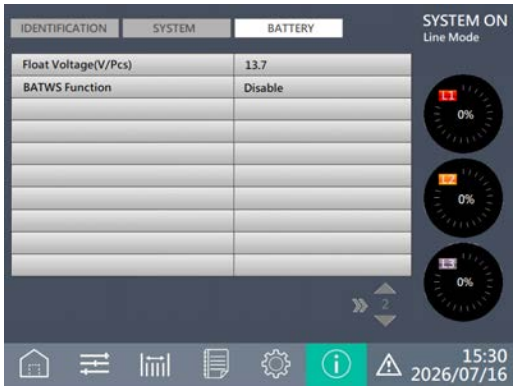

Figure 4-26 INFORMATION Battery screen page 2

4.2.8 Events Screen

When event occurs, you will see the warning in the Main Screen, as shown in Figure 4-27. You also can touch icon to check the latest event lists, history events and reset all events as shown in Figure 4-27.

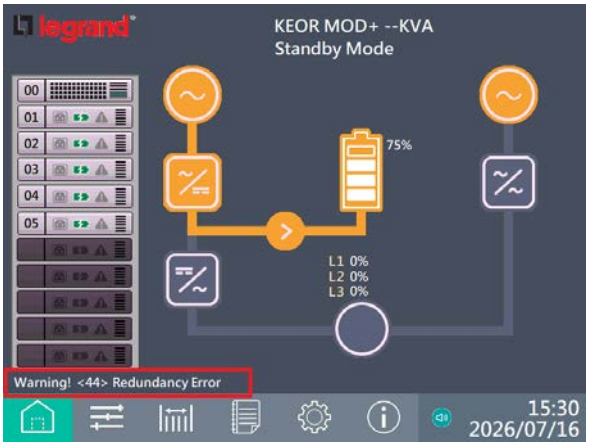

Figure 4-27 Alarm warning screen

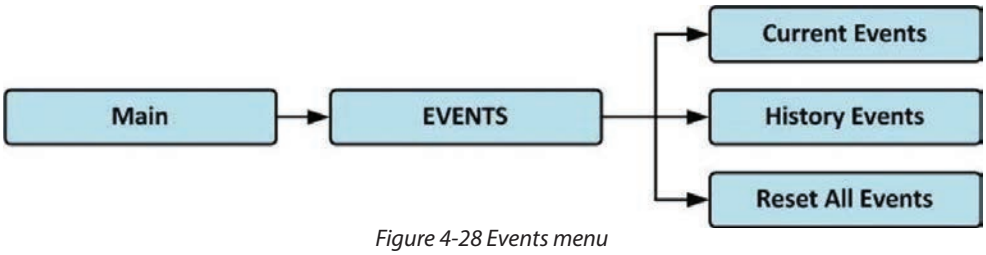

Figure 4-28 Events menu

4.2.8.1 Current Events

When an event occurs, it will display Module ID and alarm code on Current Events screen. It can save up to 50 events on the current list. Only 10 events can be listed on one page. Therefore, if it exceeds more than 10, you must press icon to read another event as shown in Figure 4-29.

Figure 4-29 Current Events screen

4.2.8.2 History Events

Detailed event information is saved in historical events. It can save up to 500 events in history events. When warning occurs, it will display an alarm code, alarm time and Module ID. When fault event occurs, it will display alarm details, alarm time and Module ID. (Refer to **Table 4-12** Alarm List) In order to record more historical information about the UPS system, the important setting changed (refer to **Table 4-13** Important setting changed), UPS operation mode changes (refer to **Table 4-14** UPS mode change) and control action executes (refer to **Table 4-15** Control execution) will be saved in History Events. Refer to Figure 4-30 for display screen.

Figure 4-30 History Events screen

4. Control Panel and Display Description

4.2.8.3 Reset All Events

The Maintainer password is required to enter Reset All Events screen as shown in Figure 4-30. After entering the correct password, it will pop up reconfirmed screen. Then, touch YES icon to reset all events or touch NO icon to cancel this action as shown in Figure 4-32.

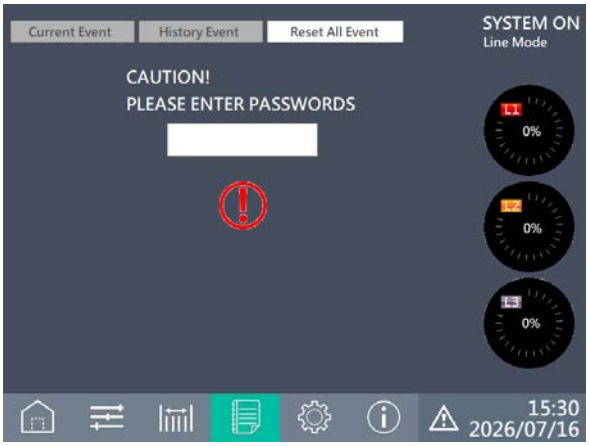

Figure 4-31 Reset All Events screen

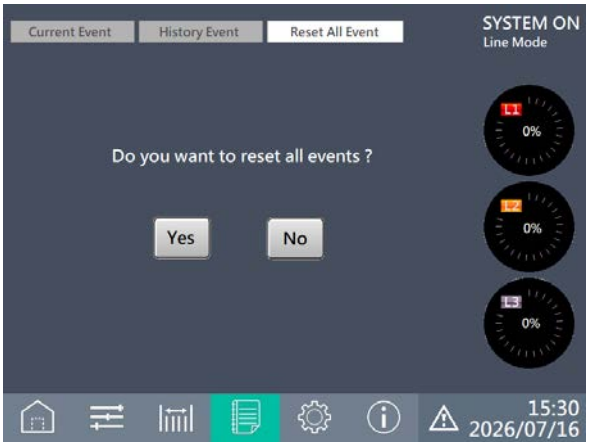

Figure 4-32 Reset All Events Confirmation screen

4.3 Alarm List

In **Table 4-12**, it provides the complete list of UPS alarm messages.

TABLE 4-12
Alarm List

Representation in display LCD	Explanation
Fault! <01>Bus start fails	BUS soft start failed
Fault! <02>Bus over	BUS voltage high
Fault! <03>Bus under	BUS voltage low
Fault! <04>Bus unbalance	BUS voltage unbalanced
Fault! <05>Bus dec fast	BUS voltage drops too fast
Fault! <06>Input overload	Converter over current
Fault! <11>INV start fail	Inverter soft start failed
Fault! <12>High INV VOL	Inverter voltage high
Fault! <13>Low INV VOL	Inverter voltage low
Fault! <14>INV A out SC	Phase A (Line to Neutral) output short circuited
Fault! <15>INV B out SC	Phase B (Line to Neutral) output short circuited
Fault! <16>INV C out SC	Phase C (Line to Neutral) output short circuited
Fault! <17>INV AB out SC	Phase A-Phase B (Line to Line) output short circuited
Fault! <18>INV BC out SC	Phase B-Phase C (Line to Line) output short circuited
Fault! <19>INV AC out SC	Phase C-Phase A (Line to Line) output short circuited
Fault! <1A>INV A N-fault	Phase A output negative power fault
Fault! <1B>INV B N-fault	Phase B output negative power fault

UPS KEOR MOD+ 420 - 600 kW Modular UPS (60 kW Power Module)

Representation in display LCD	Explanation
Fault! <1C>INV C N-fault	Phase C output negative power fault
Fault! <28>BATT VOL low	Battery voltage is low
Fault! <31>Par commu fail	Parallel communication failure
Fault! <36>Output Status Error	Output error occurs in parallel system
Fault! <41>Over temp	Over temperature
Fault! <42>DSP commu fail	DSP communication failed
Fault! <43>Overload	Heavy overload causes UPS fault
Fault! <45>Charger error	As stated,
Fault! <49>In&out phase incomp	Input and output phase error
Fault! <60>INV Over Current	Inverter over current
Fault! <61>BYP SCR SC	Bypass SCR short circuited
Fault! <62>BYP SCR open	Bypass SCR open circuited
Fault! <6C>Bus-VOL dec fast	BUS voltage drop too fast
Fault! <6D>CUR detect err	Current detected error
Fault! <6E>SPS Power fault	SPS power fault
Fault! <6F>BATT reversal	Battery polarity reverse
Fault! <71>R PFC IGBT fault	PFC IGBT over-current in R phase
Fault! <72>S PFC IGBT fault	PFC IGBT over-current in S phase
Fault! <73>T PFC IGBT fault	PFC IGBT over-current in T phase
Fault! <74>R INV IGBT fault	INV IGBT over-current in R phase
Fault! <75>S INV IGBT fault	INV IGBT over-current in S phase
Fault! <76>T INV IGBT fault	INV IGBT over-current in T phase
Fault! <7A> Power Module Connect Fail	Power module connection failure
Warning! <01> BATT open	Battery not connected
Warning! <02> IP N loss	Input N loss
Warning! <04> Line phase error	As stated.
Warning! <05> Bypass phase error	As stated.
Warning! <07> BATT over charge	Battery over charge
Warning! <08> BATT low	Battery voltage is too low
Warning! <09> Overload warning(W)	As stated.
Warning! <0A> Fan lock warning	As stated.
Warning! <0B> EPO active	As stated.
Warning! <0C> Battery low capacity	As stated.
Warning! <0D> Over temperature	As stated.

4. Control Panel and Display Description

Representation in display LCD	Explanation
Warning! <0E> Charge Fail	As stated.
Warning! <11> Line SCR Short	As stated.
Warning! <12> Bypass SCR Short	As stated.
Warning! <1A> Syn line error	Synchronize signal loss
Warning! <1C> Host line error	Host signal loss
Warning! <21> Line connect dif	Line connects different
Warning! <22> Bypass connect dif	Bypass connect different
Warning! <24> Par INV vol dif	INV voltage is different in parallel system
Warning! <33> Lock BYP OL 3 times	Bypass overload 3 times
Warning! <34> AC input CURR unb	AC input current unbalanced
Warning! <36> INV CURR unb	Inverter current unbalanced
Warning! <37> ECO Unstable	As stated.
Warning! <38> BATT replace	Battery needs to replaced
Warning! <3A> maintain is open	Maintain bypass cover is opened
Warning! <3C> Utility ext unb	Utility extremely unbalanced
Warning! <3D> Bypass unstable	As stated.
Warning! <3E> BATT VOL High	Battery voltage is too High
Warning! <3F> BATT VOL Unbalance	Battery voltage unbalanced
Warning! <41> Bypass Loss	As stated.
Warning! <43> BUS soft Error	BUS soft start failure
Warning! <44> Redundancy Error	As stated.
Warning! <46> EEPROM Fail	EEPROM operation error
Warning! <47> STS Lost	As stated.
Warning! <48> Power module unlock	As stated.
Warning! <49> Dry Con. Input Alarm 1	Dry contact input alarm 1
Warning! <4A> Dry Con. Input Alarm 2	Dry contact input alarm 2
Warning! <4B> Line Loss	Input line failure
Warning! <4C> Overload Warning (A)	Output current overload
Warning! <4D> Output Status Abnormal	Output error in parallel system
Warning! <4E> Overload Warning (U)	Bus overload
Warning! <4F> Overload Warning (V)	INV overload

UPS KEOR MOD+ 420 - 600 kW Modular UPS (60 kW Power Module)

TABLE 4-13
Important setting changed

Item No.	Description	Item No.	Description
1	Setup! Model Name	2	Setup! Turn On Password
3	Setup! Language	4	Setup! Change Turn On Password
5	Setup! Adjust Time	6	Setup! Nominal Power Display
7	Setup! System Installed Date	8	Setup! Output Voltage
9	Setup! System Last Maintain Date	10	Setup! Bypass Voltage Range
11	Setup! Battery Installed Date	12	Setup! Bypass Frequency Range
13	Setup! Battery Last Maintain Date	14	Setup! Converter Mode
15	Setup! Change Password	16	Setup! ECO Mode
17	Setup! Baud Rate	18	Setup! Bypass Mode
19	Setup! Audible Alarm	20	Setup! Auto-Restart
21	Setup! Factory Reset	22	Setup! Battery Mode Delay Time
23	Setup! EEPROM Reset	24	Setup! Shutdown Restore Time
25	Setup! EPO Function	26	Setup! Redundancy
27	Setup! Save Setting	28	Setup! Charger Test
29	Setup! Power Rating Setting	30	Setup! Battery Capacity in Ah
31	Setup! Nominal Battery Voltage	32	Setup! Battery Low Voltage
33	Setup! Maximum Charging Current	34	Setup! Battery Shutdown Voltage
35	Setup! Battery Low Capacity	36	Setup! Stop By Time
37	Setup! Periodic Battery Test	38	Setup! Temperature Compensation
39	Setup! BATTERY Age Alert	40	Setup! PRE-ALARM
41	Setup! Charging Voltage	42	Setup! Independent Battery
43	Setup! UPS Parallel	44	Setup! Auto-Restart Battery Voltage

TABLE 4-14
UPS mode change

Item No.	Description	Item No.	Description
1	UPS Mode! Power On Mode	2	UPS Mode! Standby Mode
3	UPS Mode! Bypass Mode	4	UPS Mode! Line Mode
5	UPS Mode! Battery Mode	6	UPS Mode! Battery Test Mode
7	UPS Mode! Fault Mode	8	UPS Mode! Converter Mode
9	UPS Mode! ECO Mode	10	UPS Mode! Shutdown Mode
11	UPS Mode! Un-Connection		

TABLE 4-15:
Control execution

Item No.	Description	Item No.	Description
1	Control! System Turn On	2	Control! System Turn Off
3	Control! Manual Battery Test	4	Control! Cancel Battery Test
5	Control! Turn To Bypass	6	Control! Shutdown Restore
7	Control! Cancel Shutdown	8	Control! Charger Turn On
9	Control! Charger Turn Off		

5. Interface and Communication

As shown in figure 5-1, the Static Transfer Switch (STS) Module includes dry contact ports (X1~X8), Extra Comm. slot, SNMP slot, BMS slot, LCD connection port and serial communication ports (RS232 port, USB port) on the front panel.

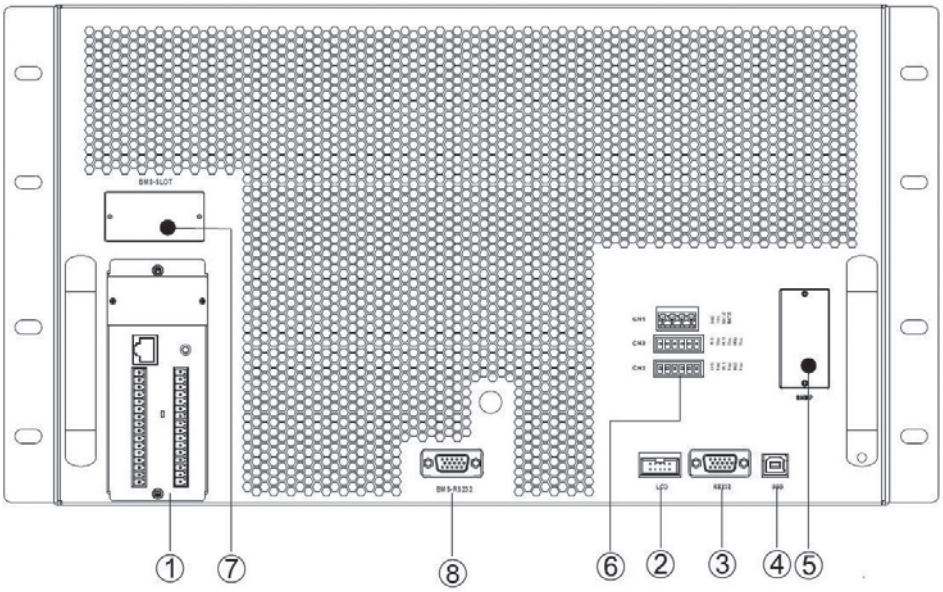

Figure 5-1 Front view of STS module

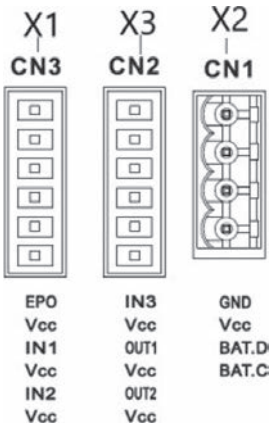

Dry Contact No.	Function
X1.1 & X1.2	Remote EPO input port
X2.1 & X2.4	Battery Cabinet Temperature Detection Port
X3.3 & X3.4	Line & Bypass Back feed output port
X3.1 & X3.2	Input port A (output switch signal)
X1.5 & X1.6	Input port B (To be defined)
X1.3 & X1.4	Input port C (To be defined)
X3.5 & X2.1	Regenerative Power Signal

5.1 Dry Contact Port

5.1.1 X1-Remote EPO Input Port

The Emergency Power off (EPO) function in UPS can be operated by an assigned remote contact. Logic N.C. turns off the UPS.
X1.1&X1.2 is the remote EPO input port.
The port is shown in Figure 5-2 and described in **Table 5-1**.

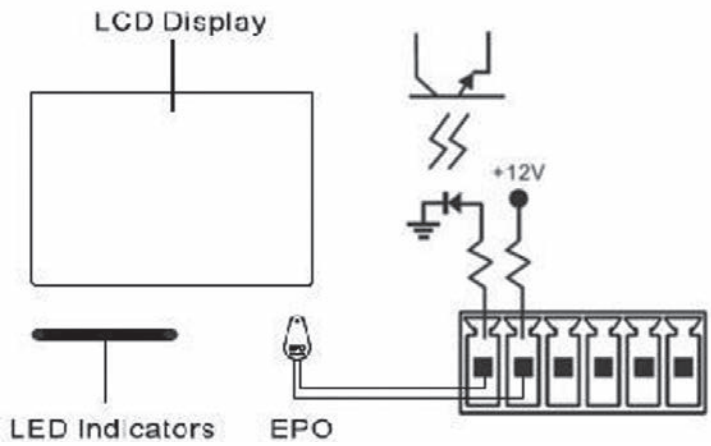

Figure 5-2 Remote EPO input port

TABLE 5-1
Description of remote EPO port

EPO Bottom	Position	Description
OFF	X1.1 & X1.2	EPO is not activated when X1.1 & X1.2 opened
ON	X1.1 & X1.2	EPO is activated when X1.1 & X1.2 shortened

EPO function activates shutdown of the rectifiers, inverters and static transfer switch. But it does not internally disconnect the input power supply.

5.1.2 X3-Output Switch State Port

X3 is the output switch port.
The port is shown in Figure 5-3
and described in **Table 5-2**.

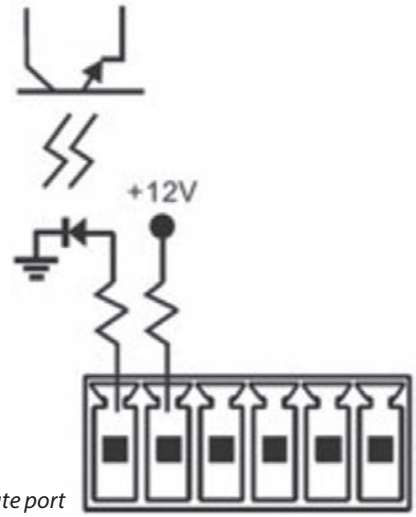

Figure 5-3 Output Switch State port

TABLE 5-2
Description of Output Switch State port

Output Switch	Position	Description
OFF	X3.1 & X3.2	No Output power was shown on LCD when X3.1 & X3.2 opened
ON	X3.1 & X3.2	Output power showed on LCD when X3.1 & X3.2 shortened

5.1.3 X2-Battery Cabinet Temperature Detection Port

There is a battery cabinet temperature detection function in the UPS. The temperature of battery cabinet can be detected through the external battery cabinet temperature detection sensor.
Communication between the UPS and Battery temperature detection board was through I2C communication protocol.
X2 is the battery cabinet temperature detection port. The port is shown in Figure 5-4 and described in **Table 5-3**.

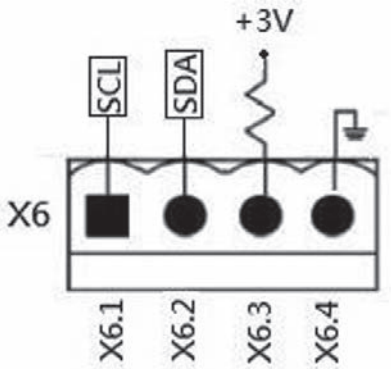

Figure 5-4 Battery Cabinet Temperature Detection port

5. Interface and Communication

TABLE 5-3
Description of Battery Cabinet Temperature Detection port

Name	Position	Description
SCL	X2.1	I^2C communication SCL Signal
SDA	X2.2	I^2C communication SDA Signal
+3.0V	X2.3	3V
Power GND	X2.4	GND

5.1.4 X3.3 & X3.4 - Line & Bypass Back feed Output Port

An external disconnect device, coil controlled by Ups interface.
When input ac Loss, it will open the contact controlled by UPS.
The port is shown in Figure 5-5 and described in **Table 5-4**.

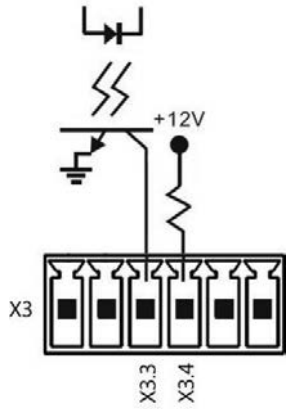

Figure 5-5 Line & Bypass Back feed output port

TABLE 5-4
Description of Line & Bypass Back feed output port

Name	Position	Description
Line & Bypass Back feed	X3.3	Line & Bypass Back feed
+VCC	X3.4	+VCC with 1kohm

5.2 Extra Comm. Slot

There is an optional card called **Extra Comm. Card.** This card can be inserted into this slot to enhance the communication capability of the modular UPS. It provides an additional SNMP Slot, Dry contact I/P & O/P signals and temperature sensors ports.

5.2.1 Product Outlook

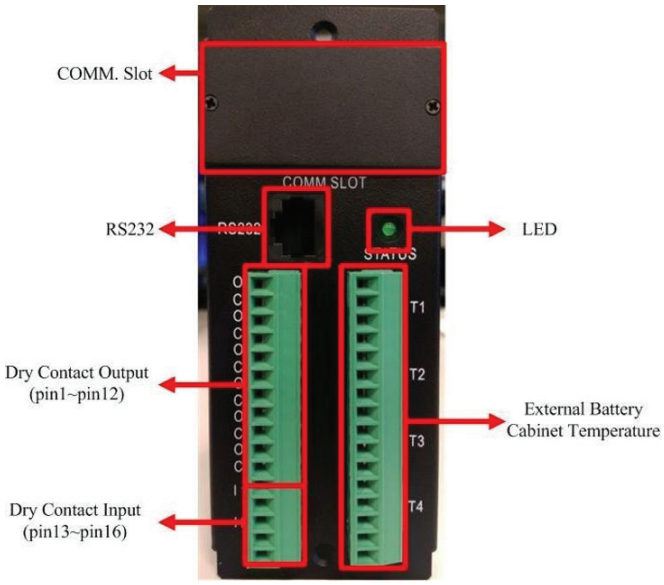

5.2.2 Product Introduction

Extra communication card is a device with additional interface functionality. This device can provide a variety different applications for UPS. The communication interfaces of extra communication card are listed below:

- RS232 port
- COMM. Slot
- Dry Contact Output
- Dry Contact Input
- External Battery Cabinet Temperature
- LED

A. RS232 port

The RS232 port can be used for not only monitoring UPS status via monitoring software but also setting dry contact function with the supplied utility tool.

B. COMM. Slot

This extra communication card has the facility of internally fitted optional SNMP card.

C. Dry Contact Output

These 6 dry contact outputs can be set to normally open or normally close by setting jumper. Please refer to the Chapter 5 Jumper Set-up for the details. It's also able to set the feature of each dry contact output port through the Extra Com Config tool software. Please refer to Chapter 4 Configuration for the details.

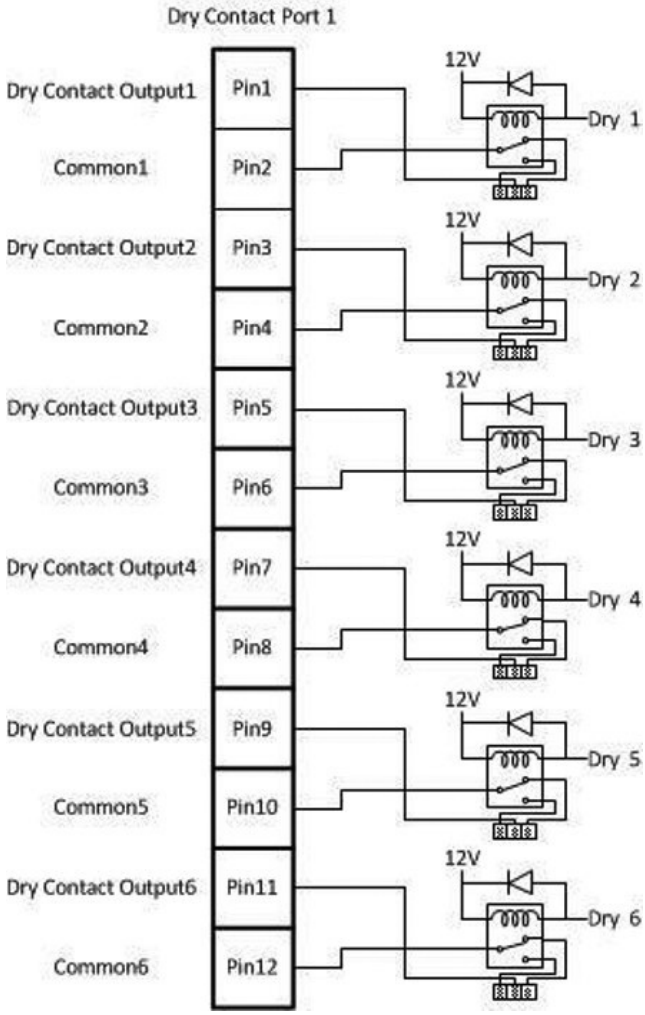

Figure 5-7

D. Dry Contact Input

There are two sets of dry contact input to receive external signals for UPS to take response.

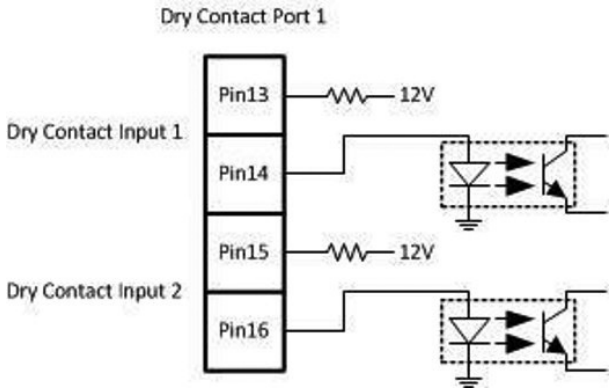

Figure 5-8

5. Interface and Communication

E. External Battery Cabinet Temperature (Option)

You may order "sensor kit" (optional accessory) to detect the temperature of external battery cabinet.

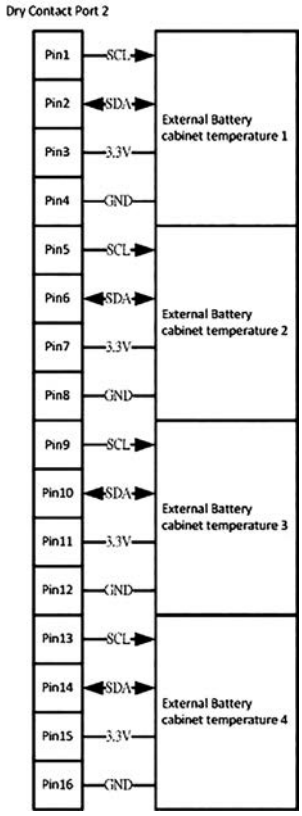

Figure 5-9

F. LED

The green LED represents the operation status of the extra communication card. Please refer to the table below.

Color	Status	Definition
Green	Flashing	Communications: On/0.1s, Off/0.4s. Un-Connection: On/0.1s, Off/0.1s.
	Off	ID conflict or Power off

5.2.3 Installation

Step 1: Remove the cover of slot on the STS module.

Figure 5-10

Step 2: Insert extra communication card into slot.

Figure 5-11

Step 3: The cover of the extra communication card should be attached close to STS module. Secure the extra communication card to the STS module chassis with 2 screws.

Figure 5-12

Step 4: Use an RJ45 cable to connect UPS and equipment to implement remote monitoring and control.

Figure 5-13

5.2.4 Configuration

Step 1: Please access www.power-software-download.com to install utility tool for Extra Communication in your computer. After software is installed successfully, it will pop up a plug icon in the tray.

Step 2: Start Extra Com Config software tool in your computer. Then, it will pop up on a screen as figure 5-14.

Step 3: Click "Read Setting" button to check the current setting of the dry contact output port. Refer to screens in figure 5-15.

Figure 5-14

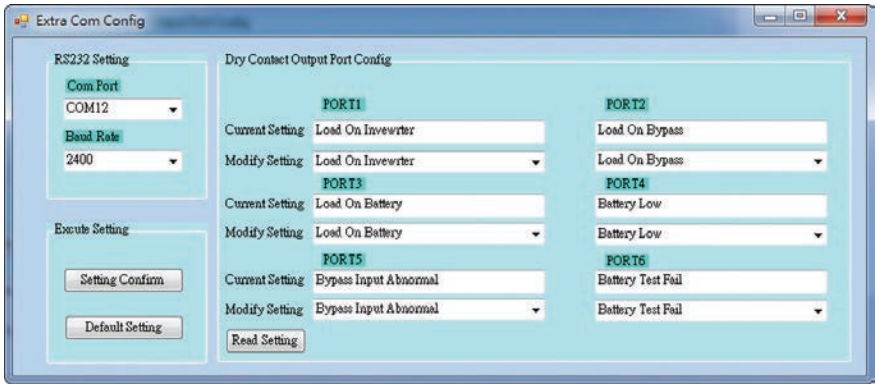

Figure 5-15

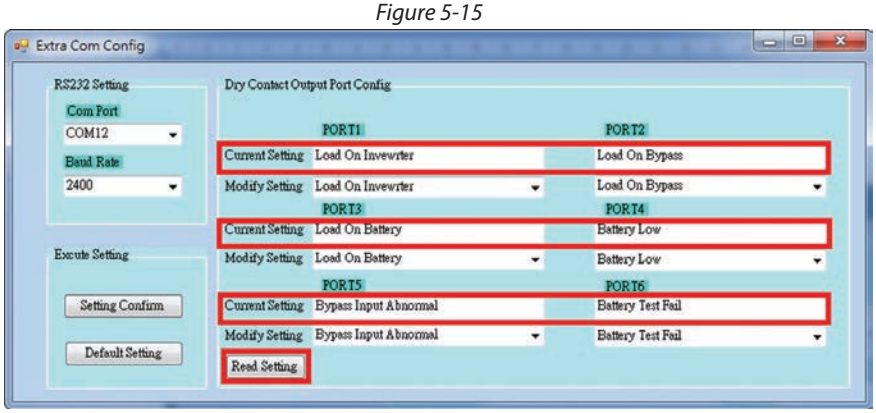

Step 4: Check all settings.
There are 20 messages to select for contact and listed in table 1.
Once dry contact output settings are selected, click "Setting Confirm" button.

TABLE 1

Contact	Message	Description
1	Load on inverter	UPS is working normally.
2	Load on bypass	UPS is in Bypass mode.
3	Load on Battery	UPS is in Battery mode.
4	Low battery	Battery voltage is low.
5	Bypass input abnormal	Bypass voltage or frequency is abnormal.
6	Battery test failure	Performs the battery test. The battery test fails.
7	Internal communication failure	DSP and MCU stop communication in power module.
8	External parallel communication failure	Communication errors between power modules.
9	Output overload warning/shutdown	Connected load is overrated output of the UPS.
10	Power module fault shutdown	The module fails and the UPS shuts down.
11	Power module warning	The module has errors, but the UPS can still function normally.
12	EPO Active	Urgently power off the UPS.
13	Maintain Bypass	The UPS transfers to Maintain bypass mode.
14	Module over temperature warning/shutdown	The temperature is too high.

5. Interface and Communication

Contact	Message	Description
15	No defined	NC
16	Bypass over temperature warning/shutdown	Bypass "static transfer switch" is over temperature.
17	Bypass static switch fault	The bypass "static transfer switch" is abnormal.
18	Line AC fail	Power failure
19	Bypass failure	Bypass source fails
20	Redundancy failure	Redundancy setting error.
21	Summary Alarm	bypass mode/battery mode/bat open/bypass loss/fault/ warning/line fail

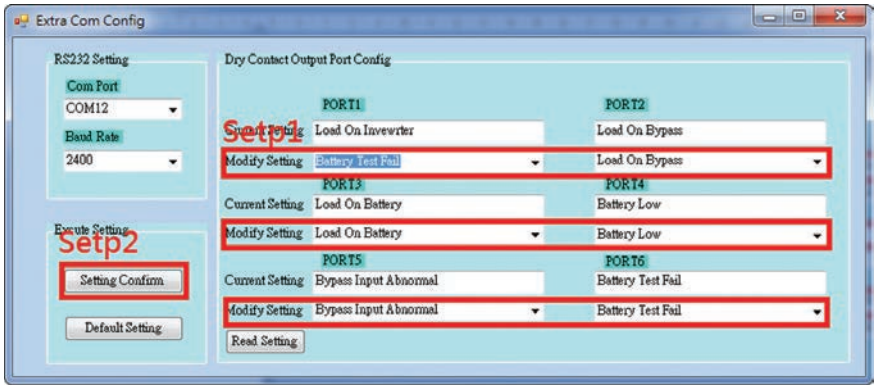

Figure 5-16

"Default Setting" button: It's to set all configurations back to default value. Refer to Figure 5-17.

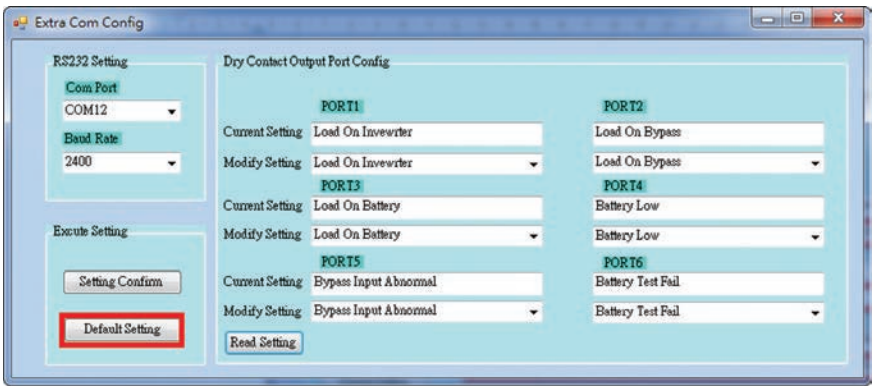

Figure 5-17

5.2.5 Jumper Set-up

Dry contact output port can be set normally open or normally close from JP1 to JP6. The 3-pin connectors can be easily found just nearby relay. The ID number of the Extra communication card can be set 60 or 61 in JS1. Please refer to figure 5-18.

Figure 5-18

Connect pin 1 and pin 2 of JP1 to set normally open type for dry contact output port. The same connection is applied from JP1 to JP6. Refer to Figure 5-19.

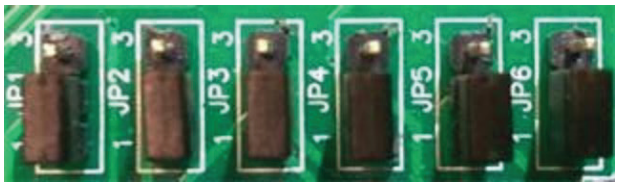

Figure 5-19

Connect pin 2 and pin 3 of JP1 to set normally close type for dry contact output port. The same connection is applied from JP1 to JP6. Refer to Figure 5-20.

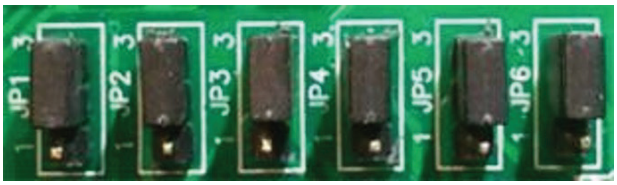

Figure 5-20

Please connect pin 1 and pin 2 of JS1 to set ID number of Extra communication card as 60 in JS1. Refer to Figure 5-21.

Figure 5-21

Please connect pin 2 and pin 3 of JS1 to set ID number of Extra communication card as 61in JS1. Refer to Figure 5-22.

Figure 5-22

5.3 Local Communication Ports – RS232 & USB

Simply use a USB cable or RS232 cable to connect USB port or RS-232 port to the PC as local communication.
Note: The RS232 and USB ports can't work simultaneously.

5.4 SNMP Slot

The SNMP, AS400 or Modbus card can be inserted into this slot to work with the UPS

5.5 BMS Slot

The BMS card can be inserted into this slot to work with the UPS.

6. Troubleshooting

Most of the Fault and Warning need to be released by authorized service personnel. Few of them can be solved by users themselves.

LCD Message	Explanation / Probable Cause	Solution
Fault! Bus Over Voltage	DC bus voltage is too high	Contact service personnel.
Fault! Bus Under Voltage	DC bus voltage is too low	Contact service personnel.
Fault! Bus Voltage Unbalance	DC bus voltage is not balanced	Contact service personnel.
Fault! Bus Soft Start Time Out	The rectifiers could not start due to low DC bus voltage within specified duration	Turn off UPS and then restart the UPS. If it fails again, contact service personnel.
Fault! Inverter Soft Start Time Out	Inverter voltage cannot reach desired voltage within specified duration	Turn off UPS and then restart the UPS. If it fails again, contact service personnel.
Fault! Inverter Voltage High	Inverter Voltage is too high	Contact service personnel.
Fault! Inverter Voltage Low	Inverter Voltage is too Low	Contact service personnel.
Fault! R Inverter Voltage Short	R phase inverter Output is shorted	Contact service personnel.
Fault! S Inverter Voltage Short	S phase inverter Output is shorted	Contact service personnel.
Fault! T Inverter Voltage Short	T phase inverter Output is shorted	Contact service personnel.
Fault! RS Inverter Voltage Short	R-S inverter Output is shorted	Contact service personnel.
Fault! ST Inverter Voltage Short	S-T inverter Output is shorted	Contact service personnel.
Fault! TR Inverter Voltage Short	T-R inverter Output is shorted	Contact service personnel.
Fault! Inverter R Negative Power	R phase inverter Output Negative Power over range	Contact service personnel.
Fault! Inverter S Negative Power	S phase inverter Output Negative Power over range	Contact service personnel.
Fault! Inverter T Negative Power	T phase inverter Output Negative Power over range	Contact service personnel.
Fault! Overload Fault	Heavy overload causes UPS fault.	Reduce some load.
Fault! Over Temperature	Make sure adequate space is allowed for air vents and the fan is working	Check if the ambient temperature is over specification. Or contact service personnel.
Fault! CAN Fault	CAN communication fault	Contact service personnel.
Fault! DSP MCU Stop Communicate	As stated,.	Contact service personnel.
Fault! Bypass SCR Fault	As stated,.	Contact service personnel.
Warning! EPO Active	Check the EPO connector	Check if the connector is loose when EPO acts abnormally.
Warning! Overload Fail	The load devices are demanding more power than the UPS can supply. Line mode will transfer to Bypass mode.	Reduce some load and check output Load-Capacity and specification
Warning! Communicate CAN Fail	CAN communication error	Contact service personnel.

LCD Message	Explanation / Probable Cause	Solution
Warning! Overload	In Line mode, the load devices are demanding more power than the UPS capacity.	Reduce some load and check output Load-Capacity and specification
Warning! Battery Open	Battery not connected	1. Check battery breaker for ON condition 2. Check if the battery connection is well connected. 3. Check the setting of Nominal Battery voltage. 4. Contact service personnel if necessary
Warning! Battery voltage High	Battery voltage is too High	Check the setting of Nominal Battery voltage and contact service personnel.
Warning! Charge Fail	As stated.	Contact service personnel.
Warning! EEPROM Fail	EEPROM operation error	Contact service personnel.
Warning! Fan Lock	As stated.	Check if the fan is blocked or contact service personnel.
Warning! Line Phase Error	As stated.	Check if the Mains phase sequence is correct and contact service personnel.
Warning! Bypass Phase Error	As stated.	Check if the Bypass phase sequence is correct and contact service personnel.
Warning! N Loss	Neutral loss	Check if the Neutral connection is well and contact service personnel.
Warning! Redundancy Set Fail	As stated.	Check the redundancy setting is correct and contact service personnel.
Warning! Maintenance Bypass	Enter maintenance	Check if the connector is loose when it acts abnormally.

7. Service

This chapter introduces the UPS service, including the service procedures of the power module, STS & control module and the replacement of air filter.

1. Only the Legrand Authorized service engineers can open / service the power modules & STS modules, if required.
2. Remove the power modules, STS module from top to bottom to prevent cabinet from toppling due to high center of gravity.
3. The static transfer switch (STS) module is NOT hot pluggable. It should be replaced only when the UPS is in maintenance bypass mode or completely powered off.

7.1 Replacement Procedure for Power Modules

- To be performed by LEGRAND authorized personnel only.
- Confirm UPS is in Line mode or Bypass mode.
- Confirm at least one Power Module remains in the UPS cabinet after other Power Module (s) is removed
- If all power modules must be removed, the replacement MUST be under Maintenance Bypass Operation Mode only.

1. Turn ready switch to "" position
2. The Power Module FAULT LED (RED) indicator is lit to indicate the Power Module output is off and disconnected from UPS system.
3. Use a screwdriver to remove the four screws from fixing holes.
4. Two people pull out together and remove the Power Module from its slot.
5. After servicing the module, confirm that the DIP switch of the module is set correctly and the ready switch is in unready state "".
6. Push the module into the cabinet and tighten the screws on both sides. Turn ready switch to "" position.
7. The re-installed Power Module will be turned on automatically when UPS is in line mode.

7.2 Replacement Procedure for STS Module

- To be performed by LEGRAND authorized personnel only.
- Confirm the UPS is operating in Maintenance Bypass Mode.

1. Follow Section "3.3.3.1 Transfer to maintenance bypass" procedure to transfer UPS into Maintenance Bypass operation.
2. Remove the fixing screws on both sides of the front panel of the module and pull the module out from the cabinet.
3. After servicing the module, push the module into the cabinet and tighten the screws on both sides.
4. Follow chapter "3.3.3.2 Transfer to UPS Protection" procedure to transfer UPS into Bypass operation
5. Press menu > control > system turn on > YES to turn UPS on.

7.3 Replacement Procedure for Air Filter

As shown below, the UPS has air filters on the inner side of the front door. Each filter is fixed by a fixing bar on both sides.

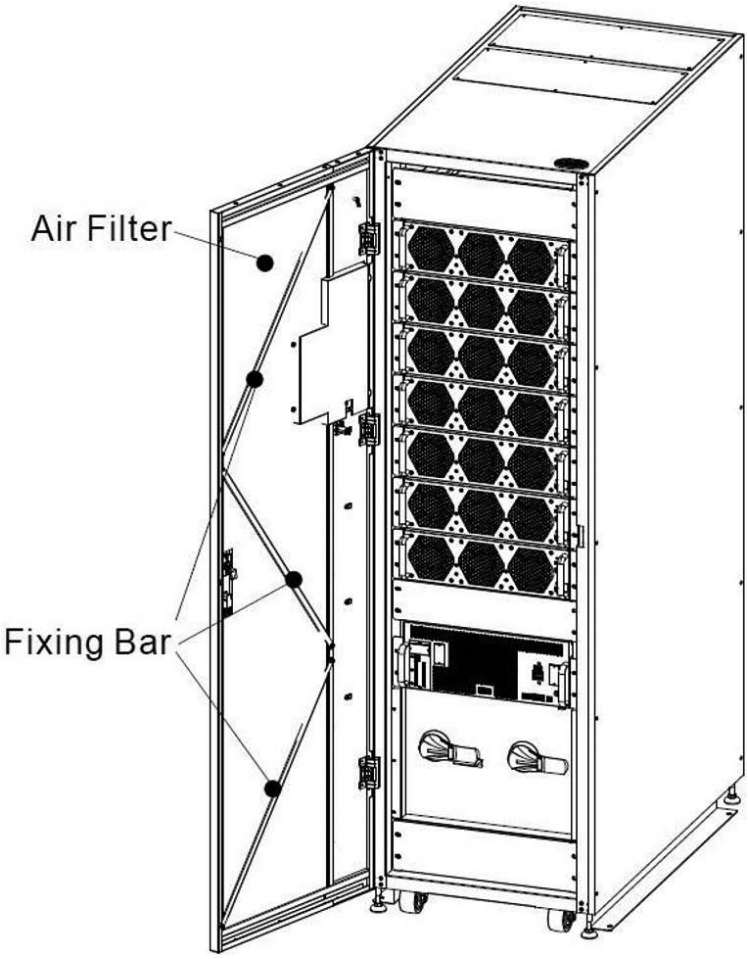

The replacement procedures of air filter are as follows:

1. Open the front door of the UPS and the air filters are on the back of the door.
2. Remove a fixing bar on either side of the air filter.
3. Remove the air filter, and insert a clean one.
4. Replace the fixing bar.

8. Specifications

The chapter states the specifications of UPS.

8.1 Conformity And Standards

The UPS has been designed to conform to the European and international standards listed in **TABLE 8-1.**

TABLE 8-1
European and international standards

Item	Normative reference
Uninterruptible power systems (UPS) –Part 1: General and safety requirements for UPS	IEC/EN62040-1
Electromagnetic compatibility (EMC) requirements for UPS	IEC/EN62040-2
Method of specifying the performance and test requirements of UPS	IEC/EN62040-3

ESD	IEC/EN 61000-4-2 Level 3
RS	IEC/EN 61000-4-3 Level 3
EFT	IEC/EN 61000-4-4 Level 3
Surge	IEC/EN 61000-4-5 Level 3
CS	IEC/EN 61000-4-6 Level 3
Power-Frequency Magnetic field	IEC/EN 61000-4-8 Level 4
Low Frequency Signals	IEC/EN 61000-2-2 Level 10V
Conduction	IEC/EN62040-2 Category C3
Radiation	IEC/EN62040-2 Category C3

8.2 Environmental Characteristics

TABLE 8-2
Environmental characteristics

Item	Unit	Specifications
Noise within 1 m	dB	Max. 75
Altitude	m	≤1000, derate power by 1% per 100m
Relative humidity	% RH	0 ~ 95, non-condensing
Operating temperature	°C	0 ~ 40°C
Storage and transport temperature for UPS	°C	-15 ~ 60

8.3 Mechanical Characteristics

TABLE 8-3
Mechanical characteristics

Model	Unit	42U-420						
Rated power	kVA/kW	60	120	180	240	300	360	420
Dimensions, W x D x H	mm	600 x 1100 x 2010						
Weight	kg	357	401	445	489	533	577	621
Color	N/A	Black						

UPS KEOR MOD+ 420 - 600 kW Modular UPS (60 kW Power Module)

Model	Unit	42U-600									
Rated power	kVA/kW	60	120	180	240	300	360	420	480	540	600
Dimensions, W x D x H	mm	1000 x 1065 x 2000									
Weight	kg	526	570	614	658	702	746	790	834	878	922
Color	N/A	Black									

3U Power Module

Model	Unit	PM-60
Rated power	kVA/kW	60KVA/60KW
Dimensions, W x D x H	mm	750 x 438 x 130
Weight	kg	44

8.4 Electrical Characteristics (Input Rectifier)

TABLE 8-4
Rectifier AC input (mains)

Rated power (kVA)	Unit	60~600	
Rated AC input voltage	Vac	380/400/415 (3-phase and sharing neutral with the bypass input)	
Input voltage tolerance	Vac	305 ~ 478; 208 ~ 304(output derated below 70%)	
Frequency	Hz	50/60 (tolerance: 40Hz ~ 70Hz)	
Power factor	kW/kVA	0.99	
Harmonic current distortion	THDI%	<3 (full load)	
Max. current / phase	A	60kVA/60kW	110
		120kVA/120kW	220
		180kVA/180kW	330
		240kVA/240kW	440
		300kVA/300kW	550
		360kVA/360kW	660
		420kVA/420kW	770
		480kVA/480kW	880
		540kVA/540kW	990
		600kVA/600kW	1100
Icc	kA	≤ 10kA	

8. Specifications

8.5 Electrical Characteristics (Intermediate DC Circuit)

TABLE 8-5
Battery

Intermediate DC circuit		
Battery		External battery
Number of lead-acid cells	Nominal	216 (6cells x 36 12V battery block)
	Maximum	252 (6cells x 42 12V battery block)
	Minimum	192 (6cells x 32 12V battery block)
Float voltage	V / cell	2.28 V / cell
Temperature compensation	mV / °C / cl	0~-5 (optional)
Boost voltage	VRLA	2.35V / cell
EOD voltage	V/cell	1.67-1.83V/cell (adjustable)
Battery charge	V/cell	Constant current and constant voltage charge mode
Battery charging power[1] max current	A	18A / per power module (adjustable)
Ripple voltage	% V float	≤1
Ripple current	% C10	≤5

1. At low input voltage the UPS recharging capability increases and load decreases (up to the maximum capacity indicated)

8.6 Electrical Characteristics (Inverter Output)

TABLE 8-6
Inverter output (to critical load)

Rated power (kVA)	Unit	60 ~ 600	
Rated AC voltage[1]	Vac	380/400/415 (three-phase four-wire, with neutral reference to the bypass neutral)	
Frequency	Hz	50/60 Auto Selectable	
Overload	%	100%~110% for 60min 110%~125% for 10min 126%~150% for 1min >150% for 100ms	
Steady state voltage stability	%	±1 (balanced load), ±2 (100% unbalanced load)	
Total harmonic voltage	%	<2 (linear load), <4 (non-linear load)	
Synchronization window		+/- 1Hz, +/- 2Hz, +/- 4Hz (default: 4Hz)	
Output rated current (380/400/415V)	A	60kVA/60kW	91/87/83
		120kVA/120kW	182/173/167
		180kVA/180kW	273/260/250A
		240kVA/240kW	364/346/334
		300kVA/300kW	456/433/417
		360kVA/360kW	546/520/500
		420kVA/420kW	637/607/583
		480kVA/480kW	728/694/666
		540kVA/540kW	819/781/749
		600kVA/600kW	912/868/832

1. Factory setting is 400V. 380 or 415V is selectable by commissioning engineer.

8.7 Electrical Characteristics (Bypass Mains Input)

TABLE 8-7
Bypass mains input

Rated power (kVA)	Unit	60 ~ 600
Rated AC voltage[1]	Vac	380/400/415 (Three-phase four-wire, sharing neutral with the rectifier input and providing neutral reference to the output)
Overload	%	105%~110% for 60min 110%~125% for 10min 126%~150% for 1min >150% for 200ms
Upstream protection, bypass line	N/A	Circuit breaker, rated up to 100% of nominal output current.
Frequency	Hz	50/60 Auto Selectable
Transfer time (between bypass and inverter)	ms	Line <>Battery 0ms Inverter <> Bypass 0ms (When phase lock fails, <4ms interruption occurs from inverter to bypass) Inverter <> ECO ≤10ms
Bypass voltage tolerance	%Vac	Upper limit: +10, +15 or +20, default: +15 Lower limit: -10, -20, -30 default: -20
Frequency Range	Hz	+/- 1Hz, +/- 2Hz, +/- 4Hz (default: 4Hz)

1. Factory setting is 400V. 380V or 415V is selectable by commissioning engineer.

9. UPS Installation for Parallel Rack System

The chapter introduces how to install and set up the single rack system to parallel rack system.

- The input harmonic current distortion will be higher than 3% in parallel rack system.
- You need to use the parallel cable for this kind of application. The parallel cable is required for the installation and operation.
- If you want to install the UPS to parallel rack system by yourself, installation must be under the supervision of LEGRAND Authorized engineers or service personnel.
- The parallel rack power capacity will be 90% of the rated load.
- The parallel system is only allowed to use common batteries.

9.1 Input and Output Wiring

1. When installing the parallel rack system, the input wires (R, S, T, N) length of the Rack must be equal to another Rack input wires. Likewise, the output wires (R, S, T, N) length of the Rack must be equal to another Rack output wires. The same length of input and output wires of parallel Racks are required. Otherwise, it will cause an unbalanced current of output load.
2. Refer to Chapter "2. Installation" about the input and output wiring and battery wiring methods.

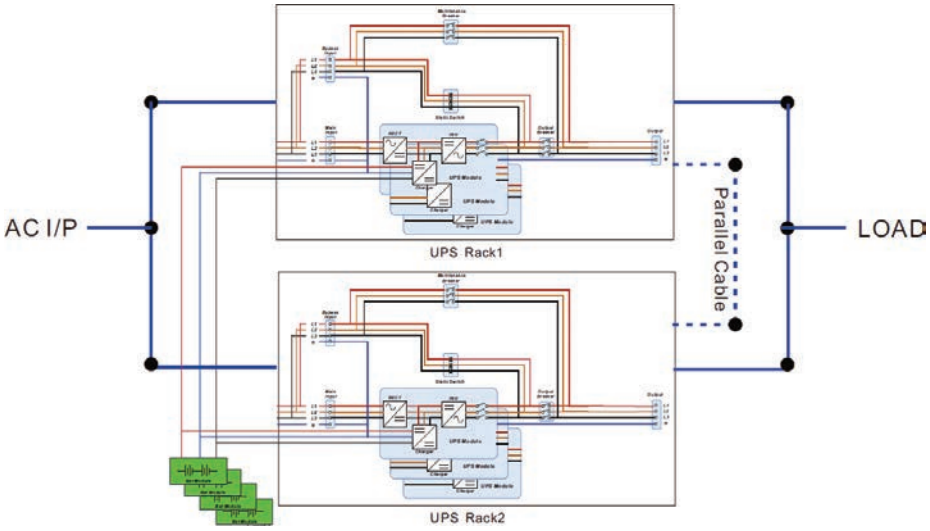

Figure 9-1 Parallel System Wiring with two Breakers

9.2 Parallel Board Setting and Power Module

9.2.1 Install Power Module of cabinet A

1. Refer to Table 2-1/ Table 2-2 to set the module address.
2. Refer to Table 9-1 to set the Cabinet.

9.2.2 Install Power Module of Cabinet B

1. Refer to Table 2-1/ Table 2-2 to set the module address.
2. Refer to Table 9-1 to set the Cabinet.

9.2.3 Install Power Module of Cabinet C & D

1. Please follow Table2-1/ Table 2-2, if there are more than 2 cabinets in parallel
2. Refer to Table 9-1 to set the Cabinet.

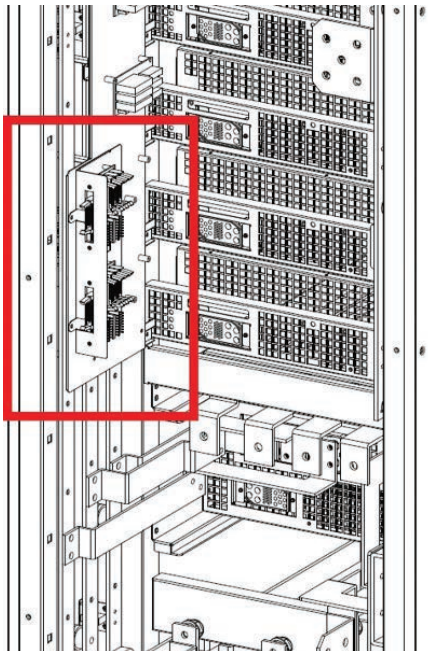

9.2.4 Parallel Board information

The parallel board is on the rear of the cabinet. Please follow table 9-1 to set the parallel units.

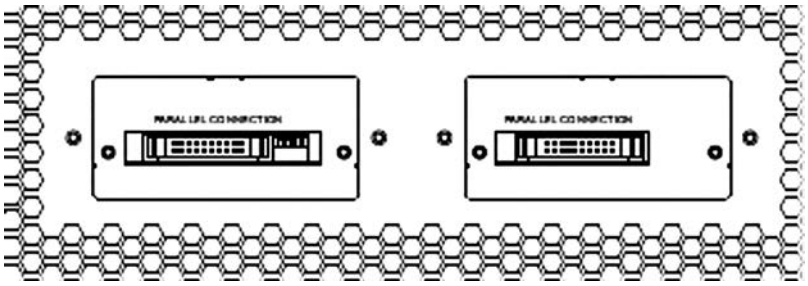

TABLE 9-1

	DIP SW 1	Terminal resistance		Cabinet A	SW2 ON	SW3 ON
	DIP SW 2	Parallel set pin		Cabinet B	SW2 OFF	SW3 ON
	DIP SW 3	Parallel set pin		Cabinet C	SW2 ON	SW3 OFF
	DIP SW 4	NC		Cabinet D	SW2 OFF	SW3 OFF

9.3 Parallel Function Setting

1. For the input and output wiring, please be sure to follow section 9.1 Input and Output Wiring to prepare.
2. For the Module Address Setting and Install Power Module, please be sure to follow section 9.2.
3. Please confirm that the ID setting of the module and the cabinet must be matched correctly, so as not to affect the normal operation of parallel connection. Please follow table 2-1

9.4 Parallel Cable Connection

The parallel cable is equipped with 20-pins connectors. Insert the 20-pins connector into the parallel board shown in figure 9-2. Both racks use the same way to connect the parallel cable.

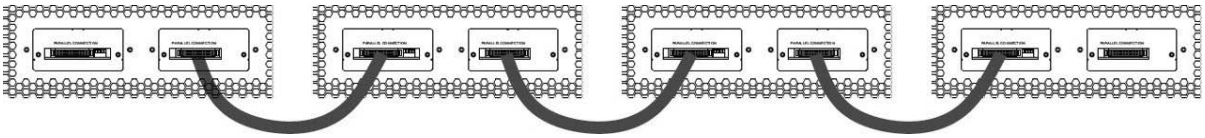

Figure 9-2

After connecting the parallel cable, please set the terminal resistance (SW1) as shown in Figure 9-3. If there are more than 2 cabinets, turn on sw1 of the first and last two cabinets, others keep the sw1 off.

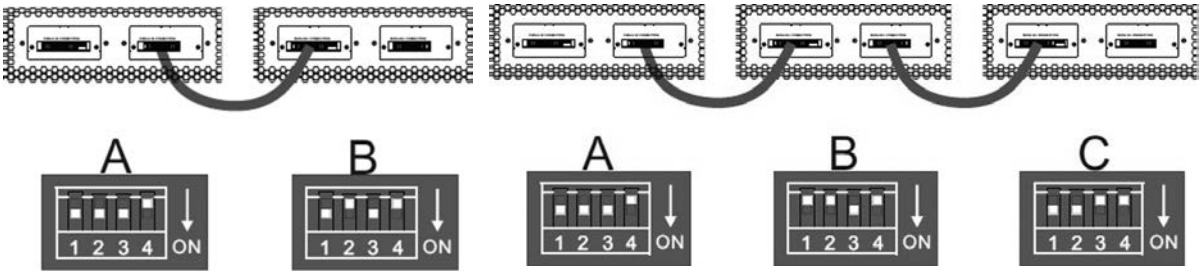

Two cabinets in parallel **Three cabinets in parallel**

9. UPS Installation for Parallel Rack System

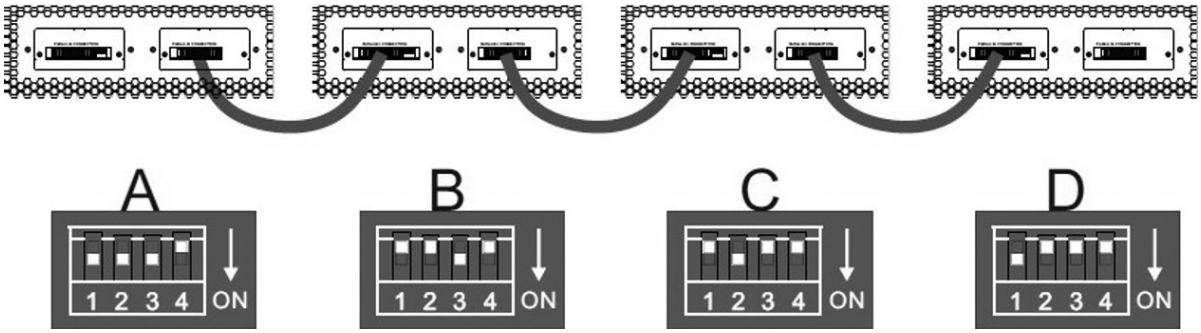

Four cabinets in parallel

Figure 9-3

After set the terminal resistance (SW1), please set the switches of the extend board shown in Figure 9-4

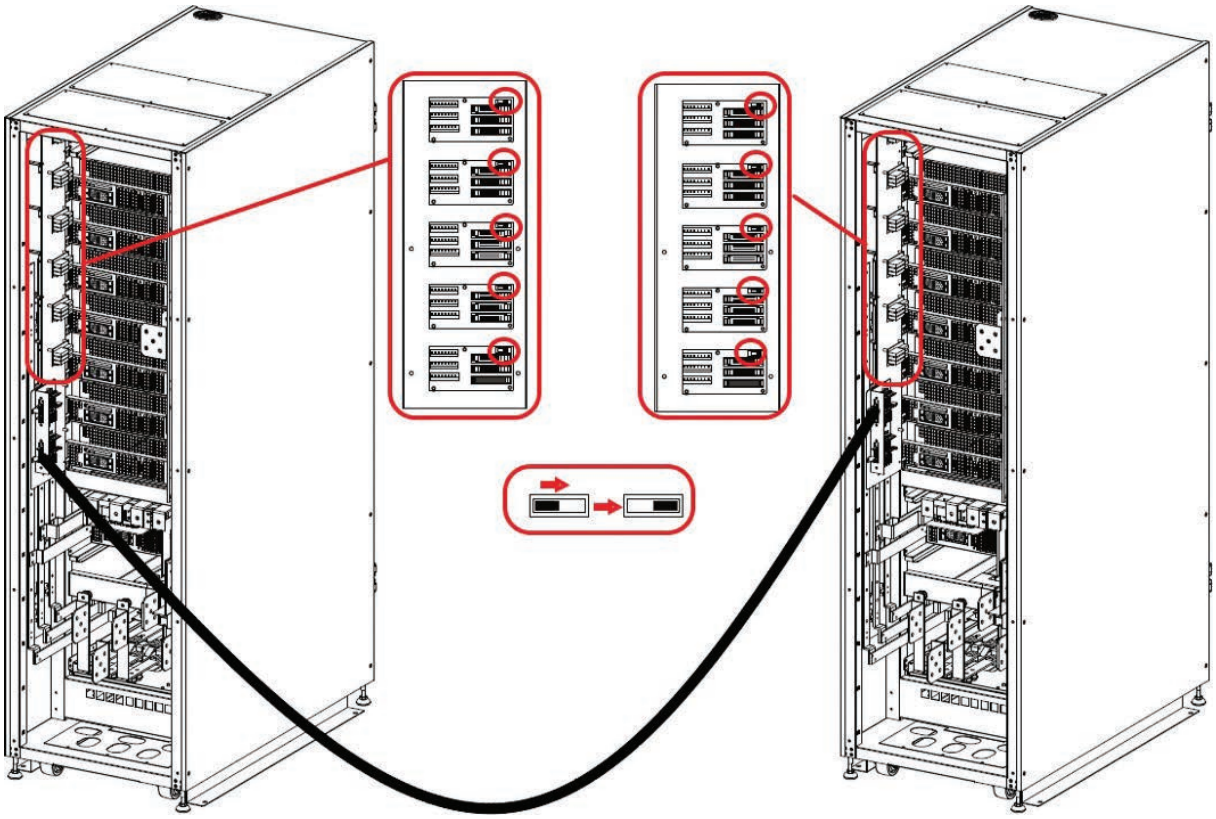

Figure 9-4

1. The parallel cable of each UPS must be connected correctly. Any wrong connection will cause the UPS system to operate abnormally.
2. Please confirm that the ID setting of the module and the cabinet are matched correctly, so as not to affect the normal operation of parallel connection. Please follow table 2-1

9.5 Parallel System Turn On Procedure

1 Please make sure section 9.1 ~ 9.4 has been well followed.
2 Please confirm the Input breaker and output breakers of each UPS (Rack) have already been turned "ON".
3 Turn On the battery Breaker.
4 Turn on the external AC source breaker to apply AC Input source to UPS.
5 Through the panel of the UPS 1(Rack A) set up the total power module number and redundant number. (Refer to User Manual 4.2.6 SETUP Screen).
6 Through the panel of the UPS 1(Rack A) get all module information and confirm the information of all modules can be display on the panel. (Refer to User Manual 4.2.5 MEASUREMENT Screen)
7 Please confirm the system without any abnormal events through the panel display. (Refer to User Manual 4.2.8 EVENTS Screen)
8 Turn on the UPS through the ON switch or control page of the panel. (Refer to User Manual 4.2.4 Control Screen)

After all the settings of the parallel UPSs are completed, all UPSs (cabinets) will become a whole system. When one of the UPSs (cabinets) is turned on or off, all the UPSs will be turned on or off at the same time. Once EPO is activated, all UPSs will shut down at the same time.

10. UPS Installation for LBS System

The chapter introduces how to install and set up the Load Bus Synchronization (LBS)

- You need to use the LBS cable for this kind of application. The LBS cable is required for the installation and operation.
- Cabinet setup and cable connection method are the same as the parallel system, referring to Chapter 9.

10.1 Input and Output Wiring

1. When installing the parallel rack system, the input wires (R, S, T, N) length of the Rack must be equal to another Rack input wires. Likewise, the output wires (R, S, T, N) length of the Rack must be equal to another Rack output wires. The same length of input and output wires of parallel Racks are required. Otherwise, it will cause an unbalanced current of output load.
2. Refer to Chapter "2. Installation" about the input and output wiring and battery wiring methods.

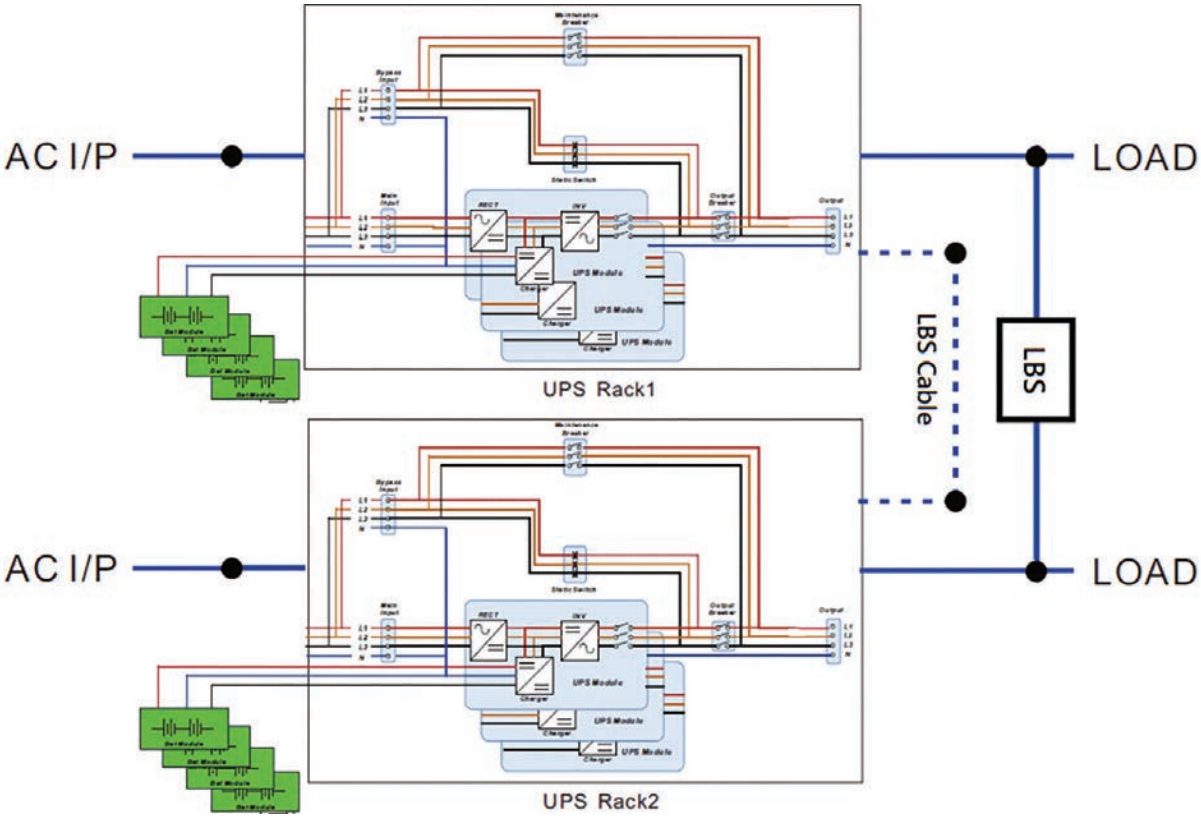

Figure 10-1 LBS System Wiring with two AC I/P and Load

10.2 LBS Function Setting

1. For the input and output wiring, please be sure to follow section 10.1 Input and Output Wiring to prepare. Install the LBS Cable after turning on the LBS function on LCD.
2. Refer to Table 4-11 to ensure that one of the cabinets is designated as rack master and the other cabinet is designated as rack slave before configuring the LBS function.
3. Enable the LBS function of each cabinet. The LCD main page will display the words "UPS In LBS". The Host and Syn. line error warning will show on the current event of rack slave. Make sure the rack master is configured to Standby or Bypass Mode, and the rack slave is configured to Standby Mode.
4. After turning on the LBS function in each cabinet, connect the LBS cable. The Host and Syn. line error warning will be cleared.
5. Please confirm the system without any abnormal events through the panel display. (Refer to User Manual 4.2.8 EVENTS Screen)
6. Turn on the UPS through the ON switch or control page of the panel. (Refer to User Manual 4.2.3 Control Screen)

10.3 LBS Cable Connection

LBS cable is equipped with 18-pins connectors. Insert the 18-pins connector into the parallel board shown in figure 10-2. Both racks use the same way to connect the LBS cable.

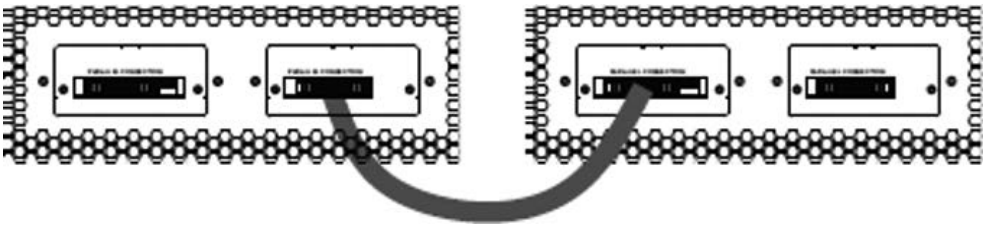

Figure 10-2

LEGRAND
Pro and Consumer Service
BP 30076 - 87002
LIMOGES CEDEX FRANCE
www.legrand.com

Installer stamp

Legrand reserves at any time the right to modify the contents of this booklet and to communicate, in any form and modality, the changes brought to the same.