# TriMOD

## THREE-PHASE MODULAR UPS

from 10 to 80 kW

#legrandImprovingLives

legrand®

# SUSTAINABILITY

## CORPORATE SOCIAL RESPONSIBILITY

Green management and sustainable supply chain: these concepts are part of Legrand's Corporate Social Responsibility, which is the company's commitment to drawing up a strategy and implementing it with practical actions aimed at socially responsible behaviour towards everything around it, such as people, things and environment.
CSR involves the management of human resources, the organisation and division of labour and the management of natural resources. CSR aims to assess the impact that the company's actions and decisions have internally, but also externally, on the stakeholders and the environment.

**BUSINESS ECOSYSTEM**
or how Legrand interacts ethically with the whole ecosystem of its activities.

**PEOPLE**
or how Legrand engages with all of its employees and stakeholders.

**ENVIRONMENT**
or how Legrand intends to limit the Group's environmental impact.

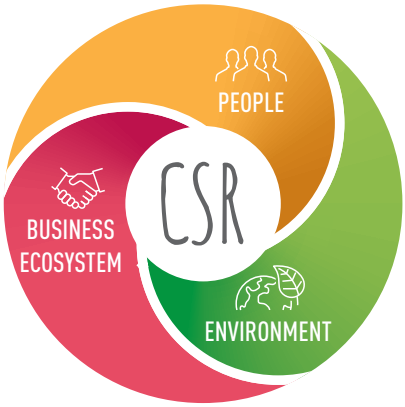


## CIRCULAR ECONOMY

We are committed to creating a system that involves all stakeholders to share values, objectives and actions in order to control and reduce the environmental impact of all our economic and production processes, reduce waste and environmental impact and transform what would once have been defined as «waste» into new resources.
Controlling these aspects has an impact on the entire life cycle of the product, starting from the design of new concepts and new specifications for the materials the UPS is made of; this is possible through responsible design and procurement processes (so-called «green procurement»), with a strong focus on research and the use of innovative materials from the circular economy and alternative raw materials. When a product ends its life, all these materials can become high value-added resources that can be used in other production cycles.

## DIGITALISATION

Many of our documents are now available in a digital format to view on a PC or smartphone, not only making them always accessible but also reducing the amount of paper we use.
Digitalisation also becomes an important driver of the circular economy, since it allows the use of tools for performance data analysis and preventive diagnostics, both useful for optimising the life cycle and durability of the product.

## EFFICIENCY

Our R&D team is constantly working on the development of increasingly efficient UPSs that allow high and incremental performance with minimum energy dissipation; with regard to $CO_2$ emissions, we are implementing processes and products that represent an improvement in the percentage of carbon footprint compared to the past.
But efficiency is not only synonymous with high performance.
For us, efficiency also means ecodesign: this implies that the UPS is designed to be easily repaired, maintained and it's easy to separate its components.
This means increasing the durability of our UPSs and the possibility of reusing and recycling them at the end of their life.

## EPD/PEP

For each product family we draw up an EPD (Environmental Product Declaration) or PEP (Profil Environnemental Produit) in line with ISO 14025: it is a declaration that is a sort of environmental photograph of the product.
The EPD is drawn up according to the concept of Life Cycle Assessment: it examines the environmental impact of a product throughout its life cycle, from the development of product specifications to the choice of materials to be used and the end-of-life destination of the product itself.

UPservice contains the full documentation of UPS products in digital format. This tool allows to reduce the use of paper documents in favour of the digital format for the benefit of a lower environmental impact. Visit our website **ups.legrand.com** to download the app.

UPs SUPPORTED BY UPSERVICE

# TriMOD

## The 5th generation of Power Protection.

Legrand's experience with modular UPSs started in 1993, when the company launched its first revolutionary model. TriMOD is the result of continuous development, introducing an additional level of protection for critical systems, increasing the scalability and redundancy of the system to ensure maximum protection of the investment. TriMOD is a three-phase uninterruptible power supply from 10 to 80kW that is characterised by its modular architecture. The redundant and self-configuring single-phase modules guarantee maximum reliability and flexibility, making TriMOD the ideal solution for IT and Data Centre applications.

legrand
TRI MOD

# TriMOD

**TriMOD revolutionizes the three-phase UPS concept with its innovative modularity based on individual single-phase modules.**

## EXPANDIBLE

Single-phase modules allow power to be managed more efficiently, adapting to the specific needs of the load.

## SCALABLE

The system offers high granularity, with parallel option for power modules and UPS cabinets.

## LIGHTWEIGHT DESIGN

Easy to transport and install thanks to its compact size and lightweight (only 7.9 kg for Power Module). Maintenance is quick, simple and safe.

**This revolutionary architecture offers a number of unique advantages:**

## VERTICAL PARALLELABILITY

The power modules are connected in parallel in columns and each column is related to a phase.

## SAFE AND EASY HANDLING

Hot-swappable battery drawers designed according to EN 60485-2 to prevent overheating.

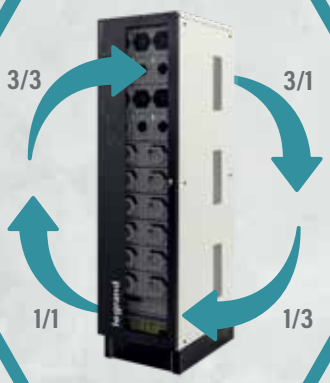


## FLEXIBLE

TriMOD offers Multi In/out configuration (3/3, 1/1, 3/1, 1/3) thanks to its 3 independent single-phase lines.

## USER-FRIENDLY HMI

The 5" touch screen display, with multicolor LED status bar, provides an user-friendly interface for monitoring the UPS in real time. Historical alarm logs and messages facilitate maintenance and resolution of problems. The latest generation of predictive diagnostics anticipates potential faults, ensuring maximum business continuity.

## IMMERSIVE HMI DESIGN

The concave shape of the HMI allows for a wider field of view and optimizes light direction, ensuring clear and readable content from every angle.

# TriMOD

## REDUNDANCY ON SINGLE-PHASE LOAD

In a system with three-phase power supply and single-phase load, if one of the modules fails, there is no loss of power as it is supplied by the other modules in operation.

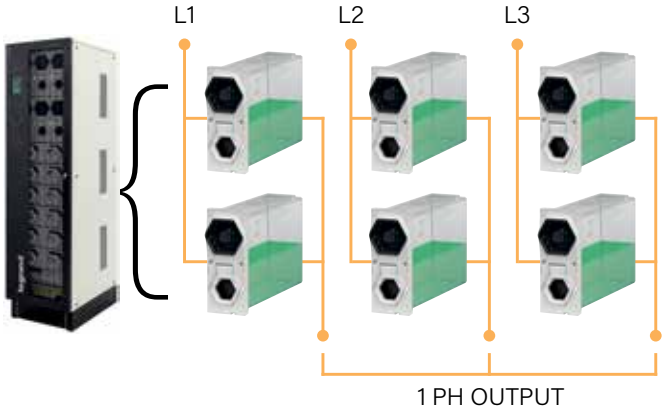


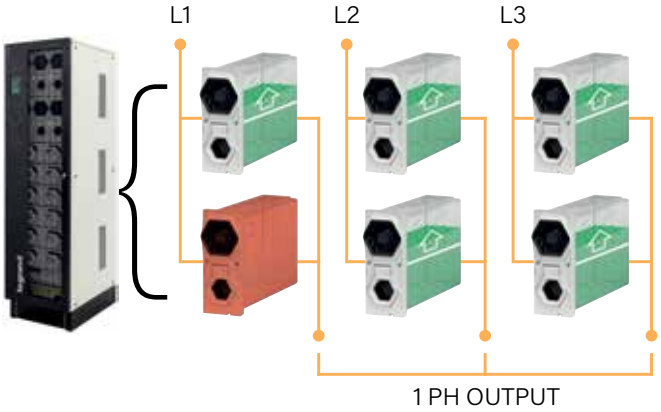


## REDUNDANCY ON THE PHASES

In a system with three independent outputs, it is possible to set the redundancy on the single phases. If one of the power modules fails, the modules in the same phase take over for the defective module.

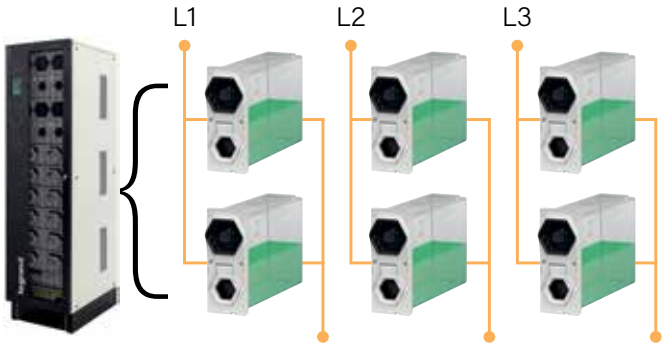


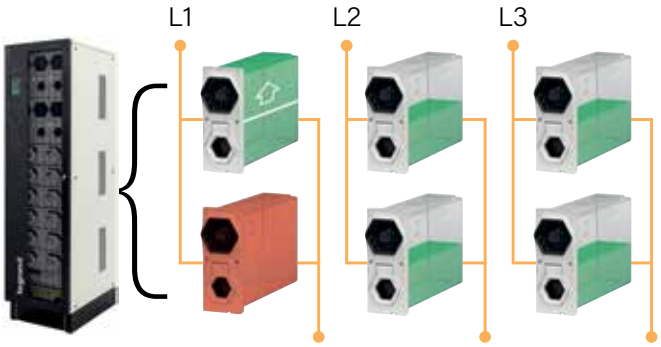


## HORIZONTAL REDUNDANCY

Each TriMOD unit can be connected in parallel with one or more units to obtain the desired power and redundancy level. In addition, the inverter output can be synchronized for no-break load transfers by downstream static transfer switches.

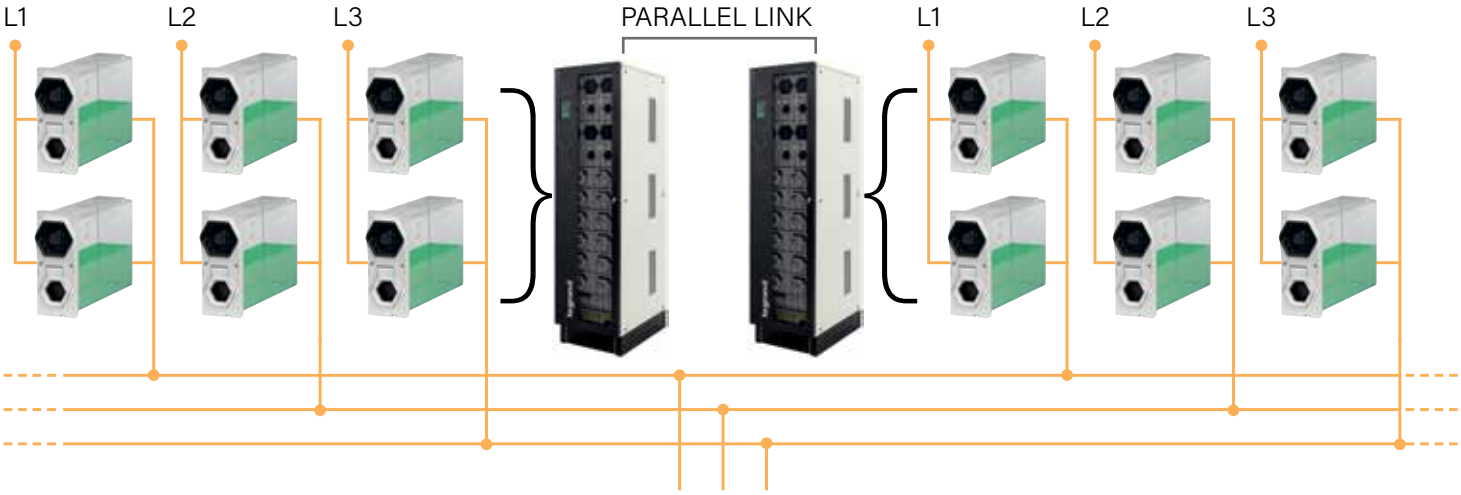

legrand

TriMOD

## MULTI CONTROL BOARD SYSTEM: ADVANCED REDUNDANCY FOR MAXIMUM SERVICE CONTINUITY

TriMOD can be configured from 1 to 4 Multi Control Boards ensuring redundant control of the UPS, eliminating single points of failure and maximising reliability.

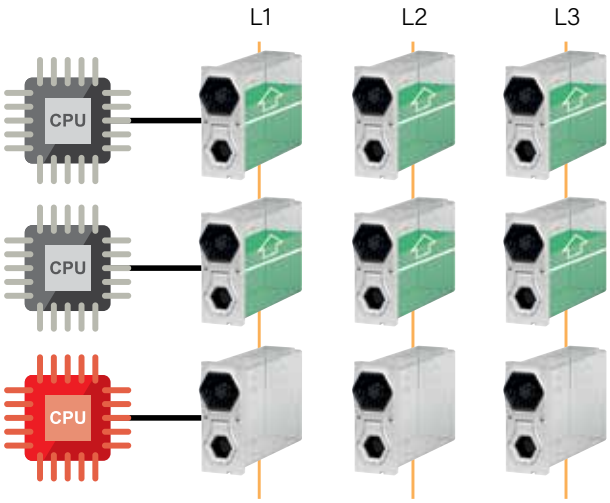


### LOAD REDUNDANCY

In the event of a failure of one of the control boards, only the modules it controls will be switched off. The system ensures service continuity by automatically redistributing the lost power to the other modules.

### HOT-SWAP

Thanks to the multi control board system you can replace the power modules without having to turn off the UPS.

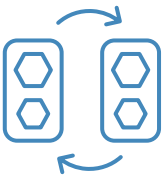

### LOW TCO

It offers enhanced energy efficiency, scalability, flexibility, and maximum availability, thanks to its modular technology and ease of maintenance, with no single point of failure.

# TriMOD

**Modular three-phase double conversion UPS VFI**

3 112 84

3 113 28

**Characteristics:**

- Modular three-phase UPS from 10 to 80 kW
- On-Line double conversion VFI-SS-11
- Adaptable, redundant and scalable solutions (IN/OUT 3-1 phase configuration)
- Quick and simple maintenance
- Low environmental impact
- Diagnostics, monitoring, historical data and parameters by display
- Reduced foot print and dimensions
- Taller cabinet to extend backup time and standard configurations
- Multi control board function
- Hot Swap system
- Frequency converter in 40-70Hz out 50/60Hz (selectable)
- Operations with genset
- Three independent phase outputs
- Event log complete with date and time

## UPS

| Item | Power (kW) | Back-up time (min.) | No. and Type Cabinet | Weight (kg) |
|---|---|---|---|---|
| 3 112 75 | 10 | 11 | 1A | 167 |
| 3 112 76 | 10 | 21 | 1A | 223 |
| 3 112 77 | 10 | 35 | 1A | 279 |
| 3 112 78 | 10 | 49 | 1B | 350 |
| 3 112 79 | 15 | 13 | 1A | 220 |
| 3 112 80 | 15 | 21 | 1A | 279 |
| 3 112 81 | 15 | 29 | 1B | 350 |
| 3 112 82 | 20 | 9 | 1A | 220 |
| 3 112 83 | 20 | 14 | 1A | 279 |
| 3 112 84 | 20 | 20 | 1B | 350 |
| 3 112 85 | 30 | 8 | 1B | 325 |
| 3 112 86+ 3 113 27 | 40 | 8 | 2A | 564 |
| 3 112 87+ 2 x 3 113 27 | 60 | 10 | 3A | 830 |
| 3 112 88+3 104 78 | 80 | 9 | 2B | 987 |

Cabinet A h=1383, Cabinet B h=1650

## Accessories

| | |
|---|---|
| 3 113 15 | Power module 3.4 kW |
| 3 113 16 | Power module 5 kW |
| 3 113 17 | Power module 6.7 kW |
| 3 111 12 | Seismic kit |
| 3 113 29 | Parallel cable kit (1 kit every 2 cabinets - length 6 m) |

## Battery accessories

| | |
|---|---|
| 3 113 18 | Kit of 4 empty battery drawers |
| 3 113 19 | Kit of 4 battery drawers 9 Ah |
| 3 113 20 | Kit of 4 battery drawers 9 Ah long life |
| 3 113 21 | Kit of 4 battery drawers 11 Ah long life |

## Additional empty battery cabinet

| | |
|---|---|
| 3 113 22 | 16-drawer modular battery cabinet |
| 3 113 23 | 20-drawer modular battery cabinet |

## Additional battery cabinet with 9Ah batteries

| | |
|---|---|
| 3 113 24 | 4-drawer modular battery cabinet |
| 3 113 25 | 8-drawer modular battery cabinet |
| 3 113 26 | 12-drawer modular battery cabinet |
| 3 113 27 | 16-drawer modular battery cabinet |
| 3 113 28 | 20-drawer modular battery cabinet |

## Power cabinet

| Item | Power (kW) | No. of installable battery drawers | No. of phases | Type Cabinet | Weight (kg) |
|---|---|---|---|---|---|
| 3 112 89 | 10 | 12 | 1-1 / 3-3 / 3-1 / 1-3 | A | 100 |
| 3 112 90 | 10 | 16 | 1-1 / 3-3 / 3-1 / 1-3 | B | 112 |
| 3 112 91 | 15 | 12 | 1-1 / 3-3 / 3-1 / 1-3 | A | 105 |
| 3 112 92 | 15 | 16 | 1-1 / 3-3 / 3-1 / 1-3 | B | 117 |
| 3 112 93 | 20 | 12 | 1-1 / 3-3 / 3-1 / 1-3 | A | 105 |
| 3 112 94 | 20 | 16 | 1-1 / 3-3 / 3-1 / 1-3 | B | 117 |
| 3 112 95 | 30 | - | 3-3 | A | 124 |
| 3 112 96 | 30 | 12 | 3-3 | B | 142 |
| 3 112 86 | 40 | - | 3-3 | A | 124 |
| 3 112 87 | 60 | - | 3-3 | A | 154 |
| 3 112 88 | 80 | - | 3-3 | B | 197 |

## Power cabinets (empty)

| Item | No. of installable power modules | No. of installable battery drawers | No. of phases | Type Cabinet | Weight (kg) |
|---|---|---|---|---|---|
| 3 112 97 | 3 x 3.4 kW | 12 | 1-1 / 3-3 / 3-1 / 1-3 | A | 74 |
| 3 112 98 | 3 x 3.4 kW | 16 | 1-1 / 3-3 / 3-1 / 1-3 | B | 86 |
| 3 112 99 | 3 x 5 o 6,7 kW | 12 | 1-1 / 3-3 / 3-1 / 1-3 | A | 79 |
| 3 113 00 | 6 x 3.4 kW | 12 | 1-1 / 3-3 / 3-1 / 1-3 | B | 91 |
| 3 113 01 | 3 x 5 o 6,7 kW | 16 | 1-1 / 3-3 / 3-1 / 1-3 | B | 91 |
| 3 113 02 | 6 x 5 kW | - | 3-3 | A | 73 |
| 3 113 03 | 6 x 5 kW | - | 1-1/3-3/3-1/1-3 | A | 78 |
| 3 113 04 | 6 x 5 kW | 12 | 3-3 | B | 91 |
| 3 113 05 | 6 x 6.7 kW | - | 3-3 | A | 73 |
| 3 113 06 | 9 x 6.7 kW | - | 3-3 | A | 77 |
| 3 113 07 | 12x 6.7kW | - | 3-3 | B | 95 |

## Power cabinets with MULTI CONTROL BOARD (empty)

| Item | No. of installable power modules | No. of installable battery drawers | No. of phases | Type Cabinet | Weight (kg) | No. of controls |
|---|---|---|---|---|---|---|
| 3 113 08 | 6 x 3,4 - 5 - 6,7 kW | - | 1-1 / 3-3 / 3-1 / 1-3 | A | 79 | 2 |
| 3 113 09 | 6 x 5 kW | 12 | 3-3 | B | 92 | 2 |
| 3 113 10 | 6 x 6.7 kW | - | 3-3 | A | 74 | 2 |
| 3 113 11 | 9 x 6.7 kW | - | 3-3 | A | 79 | 3 |
| 3 113 12 | 12 x 6.7 kW | - | 3-3 | B | 97 | 4 |

SUPPORTED BY UPSERVICE

NOTE: the stated backup times in minutes are estimated and may vary according to the load characteristics, operating conditions and environment.

## Characteristics

| General specifications | 3 112 89<br>3 112 90<br>3 112 97<br>3 112 98 | 3 112 91<br>3 112 92 | 3 112 93<br>3 112 94<br>3 112 99<br>3 113 00<br>3 113 01 | 3 112 95*<br>3 112 96*<br>3 113 02*<br>3 113 04* | 3 112 86*<br>3 113 05*<br>3 113 10* | 3 112 87<br>3 113 06<br>3 113 11 | 3 112 88<br>3 113 07<br>3 113 12 |
|---|---|---|---|---|---|---|---|
| Nominal power (kVA) | 10 | 15 | 20 | 30 | 40 | 60 | 80 |
| Active power (kW) | 10 | 15 | 20 | 30 | 40 | 60 | 80 |
| Module power (kW) | 3,4 | 5 | 6,7 | 5 | 6,7 | 6,7 | 6,7 |
| Technology | On-Line Double Conversion VFI-SS-11 | | | | | | |
| System | Modular, expandable and redundant UPS system | | | | | | |
| **Input** | | | | | | | |
| Input voltage | 380, 400, 415 3F+N+PE<br>(or 220, 230, 240 1F+N+PE) | | | 380, 400, 415 3F+N+PE | | | |
| Input frequency | 50/60Hz | | | | | | |
| Input voltage range | 400V +15% -20% | | | | | | |
| THD Input current | < 3.5% (at full load) | | | | | | |
| Compatibility with genset | Yes | | | | | | |
| Input Power Factor | > 0,99 | | | | | | |
| **Output** | | | | | | | |
| Output voltage | 380, 400, 415 3F+N+PE<br>(or 220, 230, 240 1F+N+PE) | | | 380, 400, 415 3F+N+PE | | | |
| Efficiency | Up to 96.5% | | | | | | |
| Efficiency in Eco Mode | Up to 99% | | | | | | |
| Nominal output frequency | 50/60 Hz | | | | | | |
| Peak factor | 3:1 | | | | | | |
| Waveform | Sinusoidal | | | | | | |
| Output Voltage Tolerance | ±1% | | | | | | |
| THD Output Voltage | <1% | | | | | | |
| Overload capacity | 10 minutes at 115%, 60 seconds at 135% | | | | | | |
| Bypass | Automatic bypass (static and electromechanical) and manual maintenance bypass | | | | | | |
| **Batteries** | | | | | | | |
| Battery module | Plug & Play | | | | | | |
| Battery series type/voltage | VRLA | | | | | | |
| Back-up time | Configurable | | | | | | |
| Battery charger | Smart Charge Technology, advanced 3-stage cycle | | | | | | |
| **Communication and management** | | | | | | | |
| Screen and signalling | Touch Screen 5'' display with PM LED status bar | | | | | | |
| Communication ports | 1xRS232, 1xSlot network card, 1xUSB (service), 1xUSB host port | | | | | | |
| Auxiliary signal | 6 output floating contacts, 5 input floating contacts (including EPO),<br>external temperature sensor, external bypass | | | | | | |
| Backfeed protection | NC/NO auxiliary contact | | | | | | |
| Emergency Power Off (EPO) | Yes | | | | | | |
| Remote control | Available | | | | | | |
| **Mechanical characteristics** | | | | | | | |
| Height A-B (mm) | 1383 - 1650 | | | | | | |
| Width (mm) | 413 | | | 413 | 413 | 413 | 413 |
| Depth (mm) | 632 | | | 632 | 632 | 632 | 632 |
| Number of Installed Power Modules | 3 | | | 6 | 6 | 9 | 12 |
| Installable battery drawers (A-B) | Up to 12 - Up to 16 | | | Up to 0 - 12 | - | - | - |
| Net weight A-B (kg) | Refer to the previous page, where there are the weights of the various configurations | | | | | | |
| **Environmental conditions** | | | | | | | |
| Operating temperature/humidity | 0-40°C/ 10% to 75% (non-condesing) | | | | | | |
| Protection rating | IP20 | | | | | | |
| Noise at 1 m from the unit (dBA) | 58-62 | | | | | | |
| **Certifications** | | | | | | | |
| Standards | EN 62040-1, EN 62040-2, EN 62040-3,Seismic standard (ICC-ES AC156) | | | | | | |

* Standard configurations with 3-3 distribution (multi IN/OUT settings available upon request).

# CUSTOMER SERVICES

## Reliable

Directly present in more than 70 countries and servicing its products in more than 150 countries worldwide, a team of qualified engineers is available to support your UPS system to ensure power quality and availability to the most critical loads.

## Excellent

Legrand's competitive edge lies in its ability to provide high value-added UPS systems and services for both end users and business partners.
For Legrand, creating value means coming up with solutions for lower energy consumption, but also integrating product design into the overall development process. With around 200 000 catalogue items, the Group also provides all products required for electrical and digital building installations, particularly as integrated systems, finding solutions to fit everyone's needs.

## Tailor-made

Legrand offers a complete range of specific solutions and services to meet customer requirements:

- Technical pre-sales support at the project design stage
- Factory acceptance test
- Supervision of installation, testing and commissioning, site acceptance test
- Operator training
- Site audit
- Warranty extension
- Annual maintenance contract
- Fast intervention on emergency call

# SUPPORT

**SITE INSPECTION, INSTALLATION SUPERVISION.**
We perform a comprehensive check of the UPS environment to ensure safety and fault-free operation.
Our technical experts give manufacturer's recommendations to the site engineer or electrical contractors, and supervise the UPS installation before load power-up.

**SITE TEST, FACTORY TEST, COMMISSIONING**
Our Service Engineers conduct rigorous site tests and full setting-up of the UPS system before going live. They also perform Site Acceptance Test (SAT) and Factory Acceptance Test (FAT) according to your requirements. Commissioning operations for all UPS are carried out by qualified engineers to guarantee seamless start-up. After the final handing over of the UPS system, a Test and Commissioning report is delivered to you.

# TRAINING

We offer on-site training to ensure your equipment's safe and efficient operation.
Troubleshooting courses are also available in our plants for intensive hands-on practice on UPS training equipment.

# MAINTENANCE

**PREVENTIVE MAINTENANCE**
Electronic equipment and power systems, such as UPS, contain life-limited components and parts that must be replaced according to the manufacturer's specifications.
To ensure optimal performance and to protect your critical application from potential downtime, it is crucial to perform preventive maintenance operations on a regular basis and replace parts when needed. Our Service Contracts include cleaning, IR thermography, measurements, functional tests, event log and power quality analysis, battery health check, hardware and software upgrades, and technical reports.
A Preventive Maintenance Plan is one of the most cost-effective actions that can preserve your initial investment and ensure your business continuity.

**CORRECTIVE MAINTENANCE, EMERGENCY CALL**
In the event of an Emergency Call, our worldwide service network, with engineers and spare-parts stocks strategically located as close as possible to your site, guarantees a fast intervention time with 24/7/365 assistance.
After connecting his laptop to your UPS, very powerful diagnostic software helps our engineer to identify the fault, thus ensuring short MTTR (Mean Time To Repair).
Corrective actions are performed such as part replacement, adjustments and upgrades to return the UPS system back to normal operation.

facebook.com/legrand | linkedin/legrand | X.com/legrand | pinterest.com/legrandgroup | youtube.com/user/legrand | instagram.com/legrandnews | legrandgroup.com

**Head Office**
**and International Department**
87045 Limoges Cedex - France
Phone: + 33 (0) 5 55 06 87 87
www.ups.legrand.com

AD-EXLGUPS-TR25B/GB - 07/2026